PROPOSED SITE PLAN FOR

OAK HILL SOLAR 1&2

APPLICANT:

OAK HILL SOLAR 1, LLC & OAK HILL SOLAR 2, LLC

13950 DUANESBURG ROAD

TOWN OF DUANESBURG, SCHENECTADY COUNTY, NEW YORK

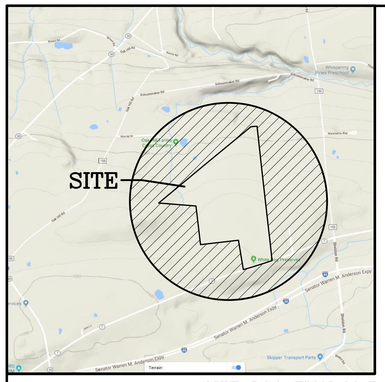

SITE LOCATION MAP
SCALE: 1" = 2000'

SITE STATISTICS

EXISTING ZONING	AGRICULTURAL AND RESIDENTIAL (R-2)
PARCEL AREA	
LOT 1	EXISTING ZONING AGRICULTURAL AND RESIDENTIAL (R-2) AGRICULTURAL AND RESIDENTIAL (R-2) PARCEL AREA LOT 1 70.378 AC / 70.378 AC LOT 2 70.353 AC / 70.353 AC
LOT 2	AC PROPOSED SOLAR FIELD SETBACKS FROM OAK HILL 1: 100 FT OAK HILL 1: 100 FT OAK HILL 2: 100 FT SIDE OAK HILL 1: 40 FT OAK HILL 1: 40 FT REAR OAK HILL 2: 40 FT REAR
PROPOSED SOLAR FIELD SETBACKS	OAK HILL 1: 100 FT OAK HILL 2: 100 FT ACCESS ROAD LENGTH 2,740 FT ±2,740 FT SCHOOL DISTRICT DUANESBURG CENTRAL DUANESBURG CENTRAL FIRE DISTRICT DUANESBURG FIRE DEPARTMENT FIRE DEPARTMENT OAK HILL SOLAR 1 PROPOSED COVERAGE 22.2 ACRES FENCED AREA 22.2 ACRES FENCED AREA OAK HILL SOLAR 2 PROPOSED COVERAGE 22.2 ACRES FENCED AREA 22.2 ACRES FENCED AREA ACCESS ROAD 0.84 AC ±0.84 AC WETLAND 0.04 AC (1,584 SF) ±0.04 AC (1,584 SF)
FRONT	100 FT 100 FT
SIDE	40 FT 40 FT
REAR	100 FT 100 FT
ACCESS ROAD LENGTH	
SCHOOL DISTRICT	DUANESBURG CENTRAL
FIRE DISTRICT	FIRE DEPARTMENT
OAK HILL SOLAR 1 PROPOSED COVERAGE	22.2 ACRES FENCED AREA
OAK HILL SOLAR 2 PROPOSED COVERAGE	22.2 ACRES FENCED AREA
PROPOSED DISTURBANCE	
ACCESS ROAD	0.84 AC ±0.84 AC
WETLAND	0.04 AC (1,584 SF)

DRAWING INDEX

1 OF 10	COVERSHEET
2 OF 10	EXISTING CONDITIONS
3 OF 10	SITE PLAN OAK HILL 1
4 OF 10	SITE PLAN OAK HILL 2
5 OF 10	SITE PLAN ACCESS ROAD
6 OF 10	EROSION & SEDIMENT CONTROL PLAN OAK HILL 1
7 OF 10	EROSION & SEDIMENT CONTROL PLAN OAK HILL 2
8 OF 10	EROSION & SEDIMENT CONTROL PLAN ACCESS ROAD
9 OF 10	SITE DETAILS
10 OF 10	DETAILS BY OTHERS

TOWN OF DUANESBURG PLANNING BOARD

RECORD OF WORK	DATE	BY
SUBMITTAL TO TOWN OF DUANESBURG PB	3/11/2019	TJM
RESUBMIT TO TOWN OF DUANESBURG PB	6/6/2019	TJM

PLANS PREPARED BY :

ENVIRONMENTAL DESIGN PARTNERSHIP, LLP.
900 Route 146 Clifton Park, New York 12065
(518) 371-7621
edpllp.com

ENVIRONMENTAL DESIGN PARTNERSHIP, LLP.
900 Route 146 Clifton Park, New York 12065
(518) 371-7621
edpllp.com

TAX MAP No. 74.00-2-5
FEBRUARY 8, 2019

PROPOSED SITE PLAN FOR
OAK HILL SOLAR 1&2
APPLICANT: OAK HILL SOLAR 1, LLC/ OAK HILL SOLAR 2, LLC

13590 DUANESBURG ROAD
TOWN OF DUANESBURG
SCHENECTADY COUNTY, NEW YORK

DRAWN BY
CHECKED BY
EDP PROJECT NUMBER 11740

THE ALTERATION OF THESE DOCUMENTS IN ANY WAY, UNLESS DONE UNDER THE DIRECT SUPERVISION OF A COMPETENT PROFESSIONAL, SUCH AS A PROFESSIONAL ENGINEER, LANDSCAPE ARCHITECT FOR A LANDSCAPE ARCHITECT OR SURVEYOR FOR A SURVEYOR, IS A VIOLATION OF THE NEW YORK STATE EDUCATION LAW AND/OR REGULATIONS AND IS A CLASS "A" MISDEMEANOR.

REVISION	DATE	BY
SUBMITTAL TO TOWN PB	03/11/19	TJM
RESUBMITTAL TO TOWN PB	03/11/19	TJM

SCALE:
N.T.S.

NOT FOR CONSTRUCTION

SHEET TITLE:
COVERSHEET

SHEET:
1 of 10

D:\SCHENECTADY\Duanesburg\Duanesburg Road\Route 7\13590 Duanesburg Road\05-dwg\Untitled Plans\00_CS_OAK HILL.dwg Jul 03, 2019 08:15:23AM

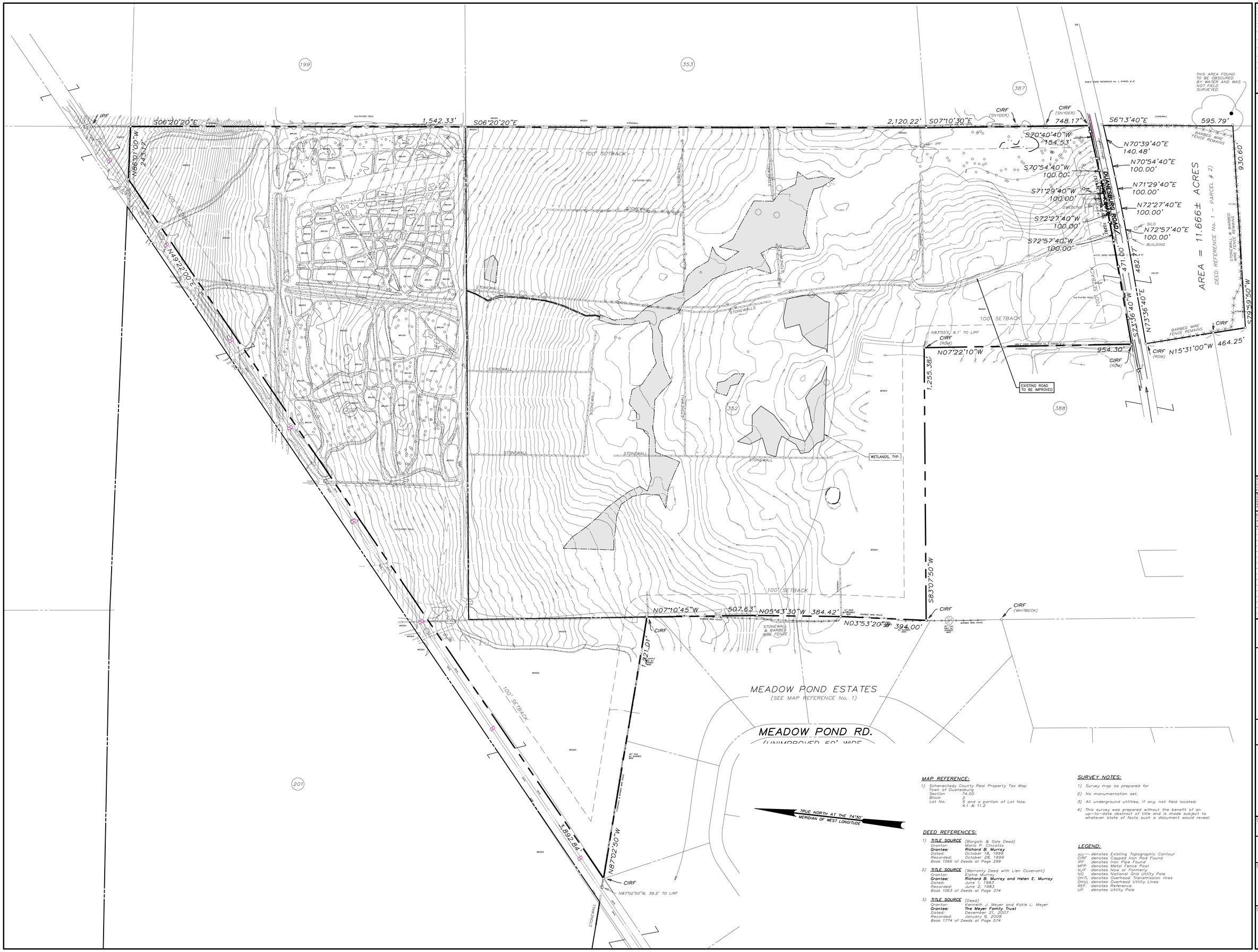

MAP REFERENCE:

1) Schenectady County Real Property Tax Map
Town of Duanesburg
Section 74.00
Block 2
Lot No. 5 and a portion of Lot Nos. 4.1 & 11.2

DEED REFERENCES:

1) **TITLE SOURCE** (Bargain & Sale Deed)
Grantor: Maria P. Cincotta
Grantee: Richard B. Murray
Dated: October 18, 1999
Recorded: October 28, 1999
Book 1566 of Deeds at Page 299

2) **TITLE SOURCE** (Warranty Deed with Lien Covenant)
Grantor: Elaine Murray
Grantee: Richard B. Murray and Helen E. Murray
Dated: June 1, 1983
Recorded: June 2, 1983
Book 1063 of Deeds at Page 374

3) **TITLE SOURCE** (Deed)
Grantor: Kenneth J. Meyer and Katie L. Meyer
Grantee: The Meyer Family Trust
Dated: December 21, 2007
Recorded: January 9, 2008
Book 1774 of Deeds at Page 574

SURVEY NOTES:

1) Survey map as prepared for

2) No monumentation set.

3) All underground utilities, if any, not field located.

4) This survey was prepared without the benefit of an up-to-date abstract of title and is made subject to whatever state of facts such a document would reveal.

LEGEND:

922	denotes Existing Topographic Contour
CIRF	denotes Capped Iron Rod Found
IPF	denotes Iron Pipe Found
MFP	denotes Metal Fence Post
N/F	denotes Now or Formerly
NG	denotes National Grid Utility Pole
OHTL	denotes Overhead Transmission lines
OHUL	denotes Overhead Utility Lines
REF.	denotes Reference
UP	denotes Utility Pole

ENVIRONMENTAL DESIGN PARTNERSHIP, LLP.
900 Route 146 Clifton Park, New York, 12065
(518) 373-1821
edpllp.com

TAX MAP No. 74.00-2-5
FEBRUARY 8, 2019

PROPOSED SITE PLAN FOR
OAK HILL SOLAR 1&2
APPLICANT: OAK HILL SOLAR 1, LLC/ OAK HILL SOLAR 2, LLC

13590 DUANESBURG ROAD
TOWN OF DUANESBURG
SCHENECTADY COUNTY, NEW YORK

DRAWN BY	
CHECKED BY	
EDP PROJECT NUMBER	11740

NO ALTERATION OF THESE DOCUMENTS IN ANY WAY WITHOUT THE WRITTEN CONSENT OF THE ENGINEER, COMPETENT PROFESSIONAL, D.E.C. ENGINEER FOR AN ENGINEER, LANDSCAPE ARCHITECT FOR A LANDSCAPE ARCHITECT OR SURVEYOR FOR A SURVEYOR, IS A VIOLATION OF THE NEW YORK STATE EDUCATION LAW AND/OR REGULATIONS AND IS A CLASS "A" MISDEMEANOR.

REVISION	DATE	BY
SUBMITTAL TO TOWN PB	03/11/19	TJM
RESUBMITTAL TO TOWN PB	03/11/19	TJM

SCALE: 1"=150'

NOT FOR CONSTRUCTION

SHEET TITLE: EXISTING CONDITIONS

SHEET: 2 of 10

G:\SCHENECTADY\Duanesburg\Duanesburg Road (Route 7)\13590 Duanesburg Road\05-dwg\Detailed Plans\02_EC_OAK HILL.dwg Jul 03, 2019 08:15:44AM,

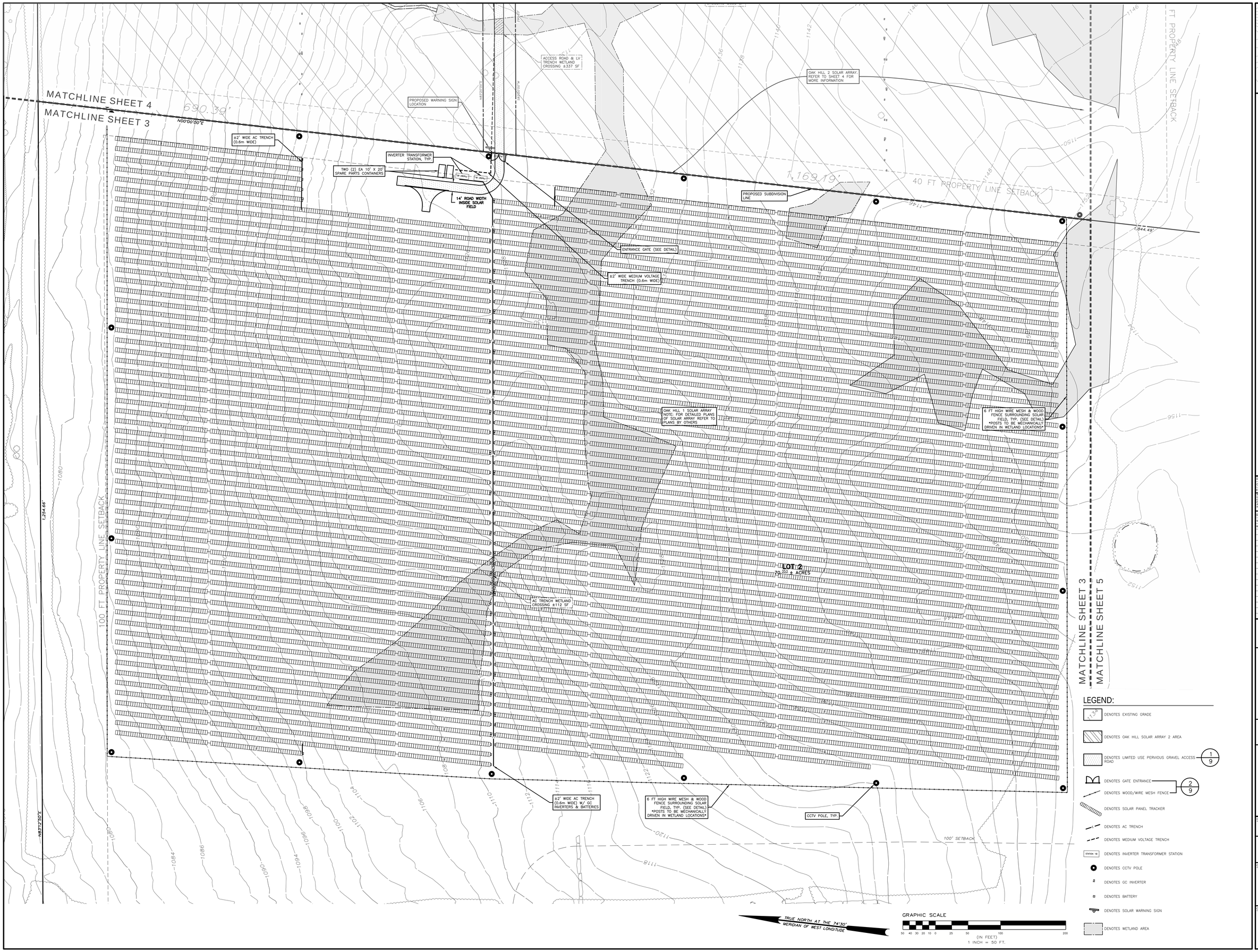

LEGEND:

- DENOTES EXISTING GRADE
- DENOTES OAK HILL SOLAR ARRAY 2 AREA
- DENOTES LIMITED USE PERVIOUS GRAVEL ACCESS ROAD (1/9)
- DENOTES GATE ENTRANCE (2/9)
- DENOTES WOOD/WIRE MESH FENCE (2/9)
- DENOTES SOLAR PANEL TRACKER
- DENOTES AC TRENCH
- DENOTES MEDIUM VOLTAGE TRENCH
- DENOTES INVERTER TRANSFORMER STATION
- DENOTES CCTV POLE
- DENOTES GC INVERTER
- DENOTES BATTERY
- DENOTES SOLAR WARNING SIGN
- DENOTES WETLAND AREA

ENVIRONMENTAL DESIGN PARTNERSHIP, LLP.
900 Route 146 Clifton Park, New York, 12065
(518) 371-7621
edpllp.com

TAX MAP No. 74.00-2-5
FEBRUARY 8, 2019

PROPOSED SITE PLAN FOR
OAK HILL SOLAR 1&2
APPLICANT: OAK HILL SOLAR 1, LLC/ OAK HILL SOLAR 2, LLC

13590 DUANESBURG ROAD
TOWN OF DUANESBURG
SCHENECTADY COUNTY, NEW YORK

DRAWN BY:	
CHECKED BY:	
EDP PROJECT NUMBER	11740

THE ALTERATION OF THESE DOCUMENTS IN ANY WAY, BY ANYONE OTHER THAN THE SEAL OF A LICENSED COMPETENT PROFESSIONAL, (I.E.) ENGINEER FOR AN ENGINEER, LANDSCAPE ARCHITECT FOR A LANDSCAPE ARCHITECT, OR SURVEYOR FOR A SURVEYOR IS A VIOLATION OF THE NEW YORK STATE EDUCATION LAW AND/OR REGULATIONS AND IS A CLASS "A" MISDEMEANOR.

REVISION	DATE	BY
SUBMITTAL TO TOWN PB	03/11/19	TJM
RESUBMITTAL TO TOWN PB	03/11/19	TJM

SCALE: 1"=50'

NOT FOR CONSTRUCTION

SHEET TITLE: SITE PLAN OAK HILL 1

SHEET: 3 of 10

Q:\SCHENECTADY\Duanesburg\Duanesburg Road (Route 7)\13590 Duanesburg Road\05-dwg\Detailed Plans\05-SPN-Oak HILL.dwg Jul 03, 2019 09:16:10AM

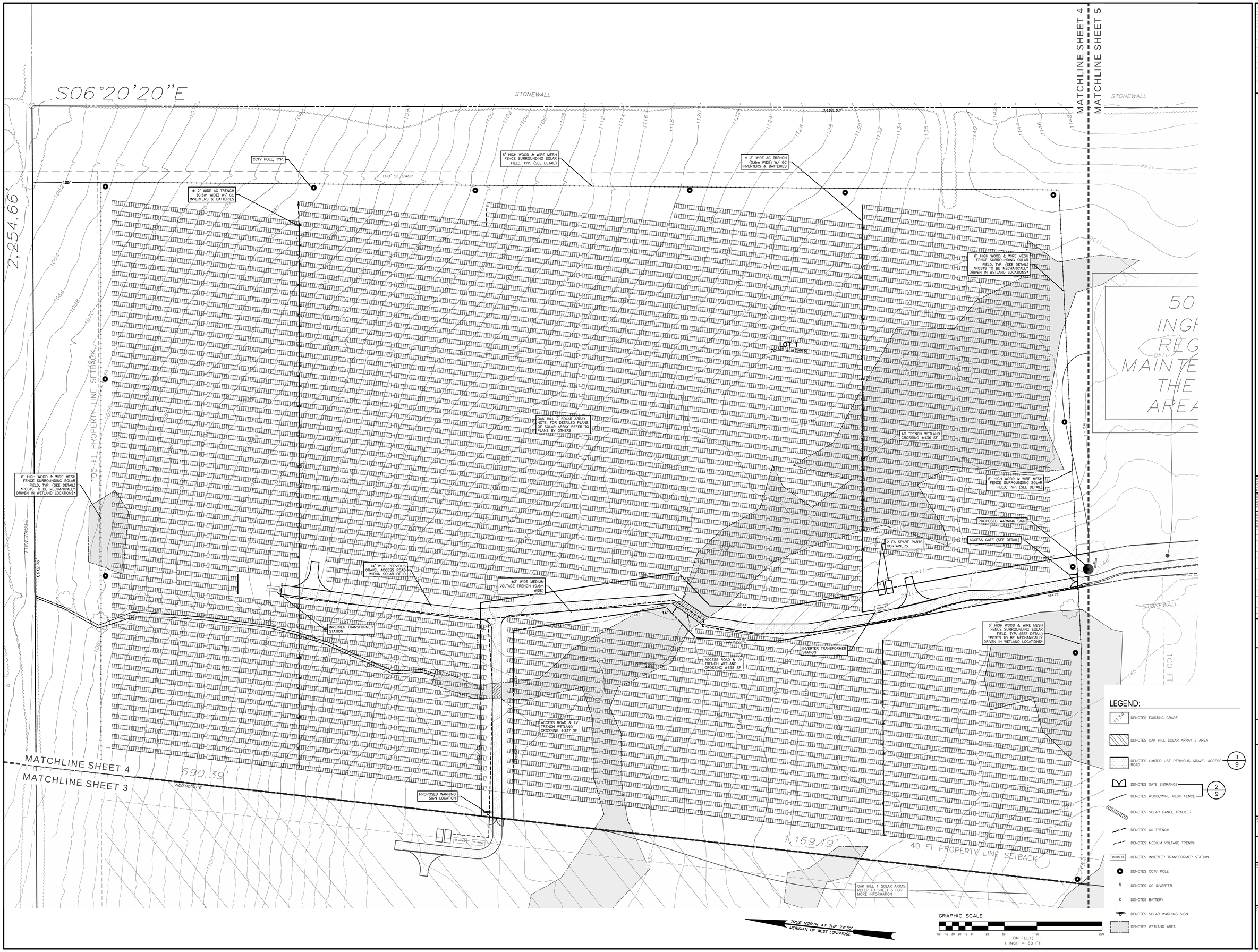

ENVIRONMENTAL DESIGN PARTNERSHIP, LLP.
900 Route 146 Clifton Park, New York 12065
(518) 371-7621
edpllp.com

TAX MAP No. 74.00-2-5
FEBRUARY 8, 2019

PROPOSED SITE PLAN FOR
OAK HILL SOLAR 1&2
APPLICANT: OAK HILL SOLAR 1, LLC/ OAK HILL SOLAR 2, LLC

13590 DUANESBURG ROAD
TOWN OF DUANESBURG
SCHENECTADY COUNTY, NEW YORK

DRAWN BY
CHECKED BY
EDP PROJECT NUMBER 11740

THE ALTERATION OF THESE DOCUMENTS IN ANY WAY UNLESS DONE UNDER THE DIRECT SUPERVISION OF A COMPARABLE PROFESSIONAL (I.E.) ENGINEER FOR AN ENGINEERING DOCUMENT, OR ARCHITECT FOR AN ARCHITECTURAL DOCUMENT, OR SURVEYOR FOR A SURVEYOR, IS A VIOLATION OF THE NEW YORK STATE EDUCATION LAW AND/OR REGULATIONS AND IS A CLASS "A" MISDEMEANOR.

REVISION	DATE	BY
SUBMITAL TO TOWN PB	03/11/19	TJM
RESUBMITAL TO TOWN PB	03/11/19	TJM

SCALE: 1"=50'

NOT FOR CONSTRUCTION

SHEET TITLE: SITE PLAN OAK HILL 2

SHEET: 4 of 10

G:\SCHENECTADY\Duanesburg\Duanesburg Road (Route 7)\13590 Duanesburg Road\05-dwg\Detailed Plans\05_SPLN_OAK HILL.dwg Jul 03, 2019 08:16:34AM

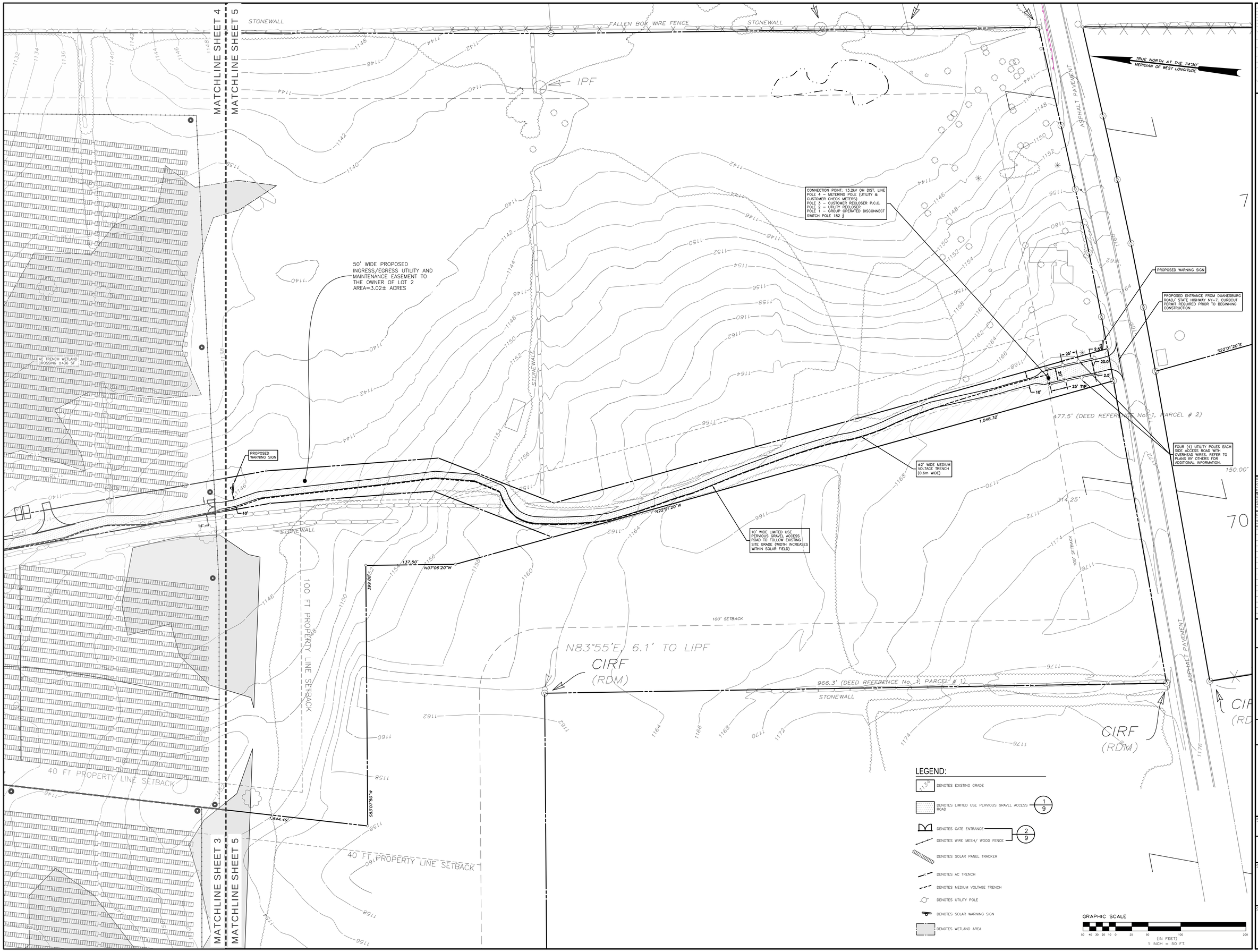

ENVIRONMENTAL DESIGN PARTNERSHIP, LLP.
900 Route 146 Clifton Park, New York, 12065
(518) 371-7621
edpllp.com

TAX MAP No. 74.00-2-5
FEBRUARY 8, 2019

PROPOSED SITE PLAN FOR
OAK HILL SOLAR 1&2
APPLICANT: OAK HILL SOLAR 1, LLC/ OAK HILL SOLAR 2, LLC

13590 DUANESBURG ROAD
TOWN OF DUANESBURG
SCHENECTADY COUNTY, NEW YORK

DRAWN BY	
CHECKED BY	
EDP PROJECT NUMBER	11740

THE ALTERATION OF THESE DOCUMENTS IN ANY WAY BY ANYONE OTHER THAN THE ENGINEER, LANDSCAPE ARCHITECT OR COMPARABLE PROFESSIONAL, (I.E.) ENGINEER FOR AN ENGINEER, LANDSCAPE ARCHITECT FOR A LANDSCAPE ARCHITECT OR SURVEYOR FOR A SURVEYOR, IS A VIOLATION OF THE NEW YORK STATE EDUCATION LAW AND/OR REGULATIONS AND IS A CLASS "A" MISDEMEANOR.

REVISION	DATE	BY
SUBMITTAL TO TOWN PB	03/11/19	TJM
RESUBMITTAL TO TOWN PB	05/11/19	TJM

SCALE: 1"=50'

NOT FOR CONSTRUCTION

SHEET TITLE: SITE PLAN ACCESS ROAD

SHEET: 5 of 10

G:\SCHENECTADY\Duanesburg\Duanesburg Road (Route 7)\13590 Duanesburg Road\05-dwg\Detailed Plans\05_SP-N_OAK HILL.dwg Jul 03, 2019 08:16:59AM

MATCHLINE SHEET 7

MATCHLINE SHEET 6

STABILIZED CONSTRUCTION ENTRANCE PRIOR TO ENTERING LIMITED USE PERVIOUS GRAVEL DRIVE, TYP.

LOW VOLTAGE UTILITY TRENCH AREA OF DISTURBANCE= ±0.137 AC

LIMITED USE PERVIOUS GRAVEL ACCESS ROAD AREA OF DISTURBANCE= ±0.577 AC

OAK HILL 1 SOLAR ARRAY
NOTE: FOR DETAILED PLANS OF SOLAR ARRAY REFER TO PLANS BY OTHERS

AC TRENCH AREA OF DISTURBANCE= ±0.125 AC

MATCHLINE SHEET 6

MATCHLINE SHEET 8

NOTE:
1. MINIMAL EROSION CONTROL DEVICES ARE ILLUSTRATED MINIMALLY TO NOT CONFUSE THE ILLUSTRATED ON SITE PLAN IN A SCHEMATIC MANNER BASED ON NYSTATE GUIDELINES FOR EROSION AND SEDIMENT CONTROL. IT

DISTURBANCE CALCULATIONS

PROPOSED DISTURBANCE FEATURE	
LV UTILITY TRENCH	0.137 AC
AC TRENCH	0.127 AC
EQUIPMENT STAGING/WASHOUT AREA	0.028 AC
ACCESS ROAD WIDENING/ MISC ROAD DISTURBANCE	0.577 AC
TOTAL DISTURBANCE	0.838 AC

GRAPHIC SCALE

50 40 30 20 10 0 25 50 100 200

(IN FEET)
1 INCH = 50 FT.

LEGEND:

- DENOTES EXISTING GRADE
- DENOTES OAK HILL SOLAR ARRAY 2 AREA
- DENOTES LIMITED USE PERVIOUS GRAVEL ACCESS ROAD
- DENOTES GATE ENTRANCE — 2/9
- DENOTES WOOD/WIRE MESH FENCE
- DENOTES SOLAR PANEL TRACKER
- DENOTES AC TRENCH
- DENOTES MEDIUM VOLTAGE TRENCH
- STATION 18 — DENOTES INVERTER TRANSFORMER STATION
- DENOTES CCTV POLE
- DENOTES GC INVERTER
- DENOTES BATTERY
- DENOTES SOLAR WARNING SIGN

ENVIRONMENTAL DESIGN PARTNERSHIP, LLP.
900 Route 146 Clifton Park, New York, 12065
(518) 373-1821
edpllp.com

TAX MAP No. 74.00-2-5
FEBRUARY 8, 2019

PROPOSED SITE PLAN FOR
OAK HILL SOLAR 1&2
APPLICANT: OAK HILL SOLAR 1, LLC/ OAK HILL SOLAR 2, LLC

13590 DUANESBURG ROAD
TOWN OF DUANESBURG
SCHENECTADY COUNTY, NEW YORK

DRAWN BY	
CHECKED BY	
EDP PROJECT NUMBER	11740

THE ALTERATION OF THESE DOCUMENTS IN ANY WAY, WITHOUT THE WRITTEN CONSENT OF THE ENGINEER, LANDSCAPE ARCHITECT OR A LICENSED PROFESSIONAL, ELEC ENGINEER FOR AN ENGINEER, LANDSCAPE ARCHITECT FOR A LANDSCAPE ARCHITECT OR A LICENSED PROFESSIONAL ELEC ENGINEER IS A VIOLATION OF THE NEW YORK STATE EDUCATION LAW AND/OR REGULATIONS AND IS A CLASS "A" MISDEMEANOR.

REVISION	DATE	BY
SUBMITTAL TO TOWN PB	03/11/19	TJM
RESUBMITTAL TO TOWN PB	03/11/19	TJM

SCALE:
1"=50'

NOT FOR CONSTRUCTION

SHEET TITLE:
EROSION & SEDIMENT CONTROL PLAN OAK HILL 1

SHEET:
6 of 10

Q:\SCHENECTADY\Duanesburg\Duanesburg Road (Route 7)\13590 Duanesburg Road\05-dwg\Detailed Plans\06_GPhL_OAK HILL.dwg Jul 03, 2019 09:17:29AM

DISTURBANCE CALCULATIONS

PROPOSED DISTURBANCE FEATURE

LV UTILITY TRENCH	0.137 AC
AC TRENCH	0.127 AC
EQUIPMENT STAGING/WASHOUT AREA	0.028 AC
ACCESS ROAD WIDENING/ MISC ROAD DISTURBANCE	0.577 AC
TOTAL DISTURBANCE	0.838 AC

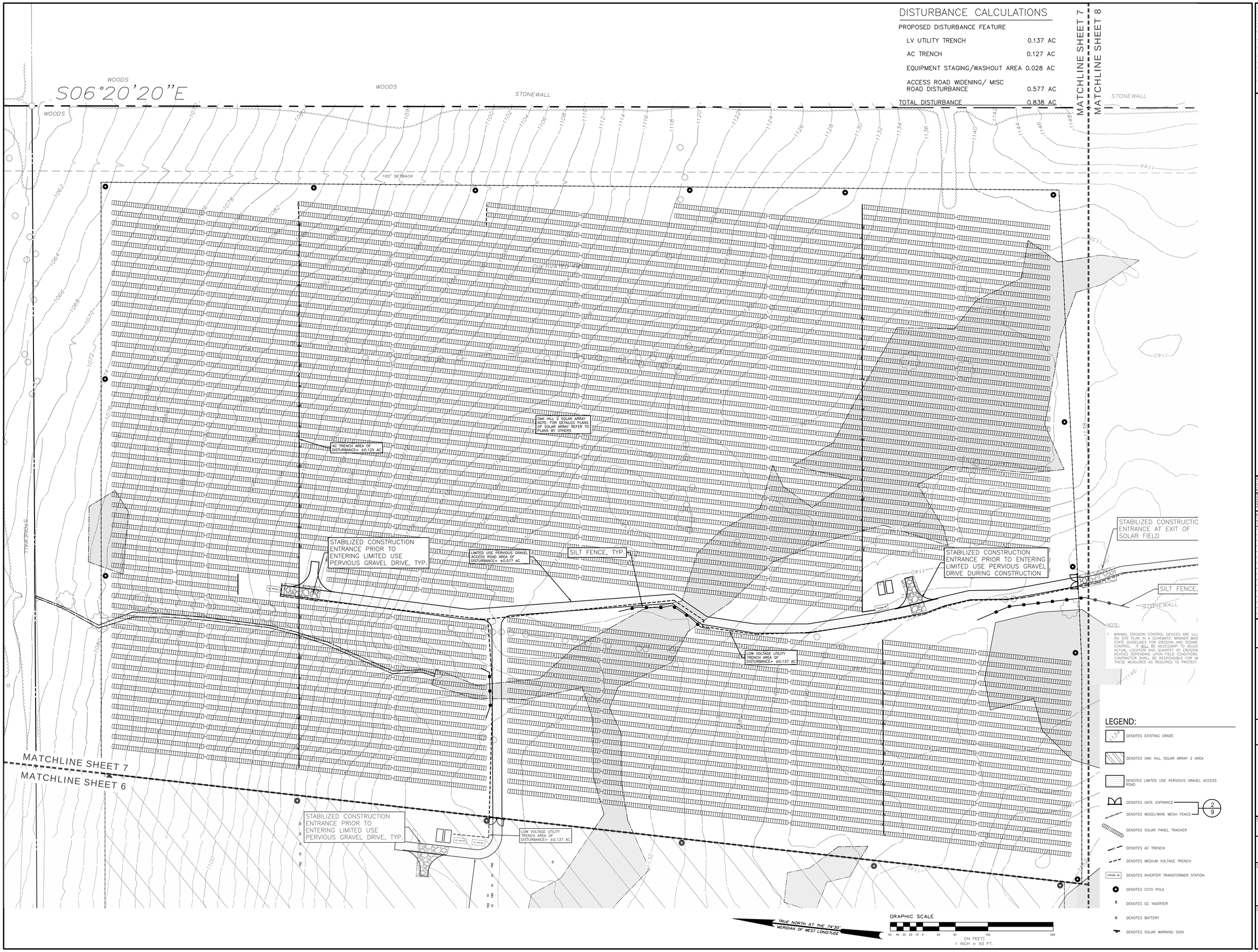

NOTE:

1. MINIMAL EROSION CONTROL DEVICES ARE ILL ON SITE PLAN IN A SCHEMATIC MANNER BAS STATE GUIDELINES FOR EROSION AND SEDIME CONTROL. IT WILL BE NECESSARY TO ADJUS ACTUAL LOCATION AND QUANTITY OF EROSION DEVICES DEPENDING UPON FIELD CONDITONS. CONTRACTOR SHALL BE RESPONSIBLE FOR IM THESE MEASURES AS REQUIRED TO PROTECT

LEGEND:

- DENOTES EXISTING GRADE
- DENOTES OAK HILL SOLAR ARRAY 2 AREA
- DENOTES LIMITED USE PERVIOUS GRAVEL ACCESS ROAD
- DENOTES GATE ENTRANCE
- DENOTES WOOD/WIRE MESH FENCE (2/9)
- DENOTES SOLAR PANEL TRACKER
- DENOTES AC TRENCH
- DENOTES MEDIUM VOLTAGE TRENCH
- DENOTES INVERTER TRANSFORMER STATION
- DENOTES CCTV POLE
- DENOTES GC INVERTER
- DENOTES BATTERY
- DENOTES SOLAR WARNING SIGN

ENVIRONMENTAL DESIGN PARTNERSHIP, LLP.
900 Route 146 Clifton Park, New York 12065
(518) 371-7621
edpllp.com

TAX MAP No. 74.00-2-5
FEBRUARY 8, 2019

PROPOSED SITE PLAN FOR
OAK HILL SOLAR 1&2
APPLICANT: OAK HILL SOLAR 1, LLC/ OAK HILL SOLAR 2, LLC

13590 DUANESBURG ROAD
TOWN OF DUANESBURG
SCHENECTADY COUNTY, NEW YORK

DRAWN BY
CHECKED BY
EDP PROJECT NUMBER 11740

THE ALTERATION OF THESE DOCUMENTS IN ANY WAY, BY ANYONE OTHER THAN THE SEALING ENGINEER OR COMPARABLE PROFESSIONAL, ELEC ENGINEER FOR ARCHITECT, LANDSCAPE ARCHITECT OR LAND SURVEYOR, IS PROHIBITED BY ARTICLE 145 SECTION 7209 & 7210 OF THE NEW YORK STATE EDUCATION LAW AND/OR REGULATIONS AND IS A CLASS "A" MISDEMEANOR.

REVISION	DATE	BY
SUBMITTAL TO TOWN PB	03/11/19	TJM
RESUBMITTAL TO TOWN PB	03/11/19	TJM

SCALE: 1"=50'

NOT FOR CONSTRUCTION

SHEET TITLE: EROSION & SEDIMENT CONTROL PLAN OAK HILL 2

SHEET: 7 of 10

G:\SCHENECTADY\Duanesburg\Duanesburg Road (Route 7)\13590 Duanesburg Road\05-dwg\Detailed Plans\06_CPL_OAK HILL.dwg Jul 03, 2019 08:17:54AM

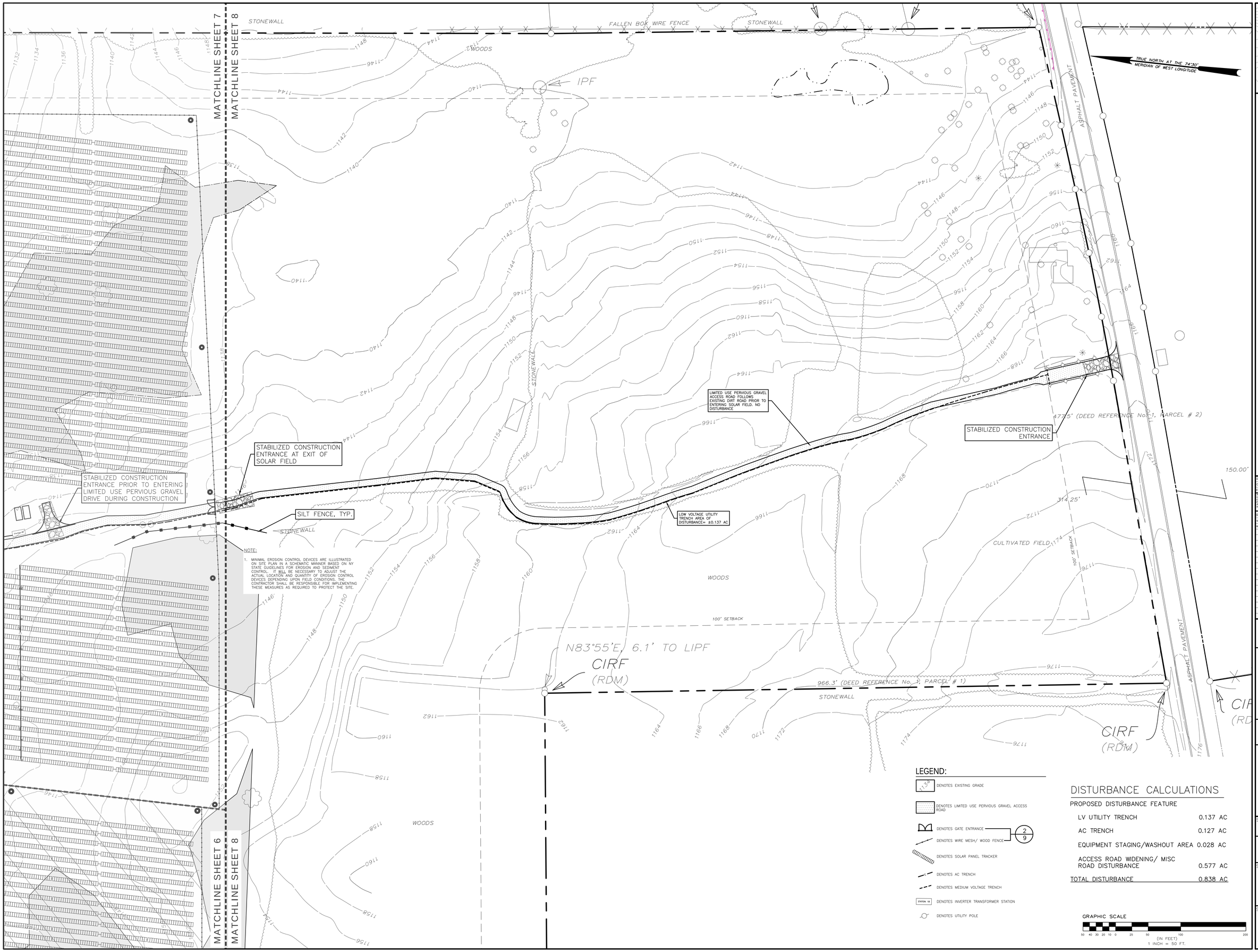

NOTE:

1. MINIMAL EROSION CONTROL DEVICES ARE ILLUSTRATED ON SITE PLAN IN A SCHEMATIC MANNER BASED ON NY STATE GUIDELINES FOR EROSION AND SEDIMENT CONTROL. IT WILL BE NECESSARY TO ADJUST THE ACTUAL LOCATION AND QUANTITY OF EROSION CONTROL DEVICES DEPENDING UPON FIELD CONDITIONS. THE CONTRACTOR SHALL BE RESPONSIBLE FOR IMPLEMENTING THESE MEASURES AS REQUIRED TO PROTECT THE SITE.

LEGEND:

- DENOTES EXISTING GRADE
- DENOTES LIMITED USE PERVIOUS GRAVEL ACCESS ROAD
- DENOTES GATE ENTRANCE
- DENOTES WIRE MESH/ WOOD FENCE (2/9)
- DENOTES SOLAR PANEL TRACKER
- DENOTES AC TRENCH
- DENOTES MEDIUM VOLTAGE TRENCH
- DENOTES INVERTER TRANSFORMER STATION
- DENOTES UTILITY POLE

DISTURBANCE CALCULATIONS

PROPOSED DISTURBANCE FEATURE

LV UTILITY TRENCH	0.137 AC
AC TRENCH	0.127 AC
EQUIPMENT STAGING/WASHOUT AREA	0.028 AC
ACCESS ROAD WIDENING/ MISC ROAD DISTURBANCE	0.577 AC
TOTAL DISTURBANCE	0.838 AC

GRAPHIC SCALE

50 40 30 20 10 0 25 50 100 200

(IN FEET)
1 INCH = 50 FT.

ENVIRONMENTAL DESIGN PARTNERSHIP, LLP.
900 Route 146 Clifton Park, New York, 12065
(518) 371-7621
edpllp.com

TAX MAP No. 74.00-2-5
FEBRUARY 8, 2019

PROPOSED SITE PLAN FOR
OAK HILL SOLAR 1&2
APPLICANT: OAK HILL SOLAR 1, LLC/ OAK HILL SOLAR 2, LLC

13590 DUANESBURG ROAD
TOWN OF DUANESBURG
SCHENECTADY COUNTY, NEW YORK

DRAWN BY
CHECKED BY
EDP PROJECT NUMBER 11740

THE ALTERATION OF THIS DOCUMENT IS NOT MEANT UNLESS DONE UNDER THE DIRECT SUPERVISION OF A LICENSED PROFESSIONAL ENGINEER, LAND SURVEYOR, ARCHITECT OR LANDSCAPE ARCHITECT. ANY ALTERATION BY ANYONE OTHER THAN A LICENSED PROFESSIONAL ENGINEER, LAND SURVEYOR, ARCHITECT OR SURVEYOR FOR A SURVEYOR, IS A VIOLATION OF ARTICLE 145 OF THE NEW YORK STATE EDUCATION LAW, REGULATIONS AND IS A CLASS "A" MISDEMEANOR.

REVISION	DATE	BY
SUBMITTAL TO TOWN PB	03/11/19	TJM
RESUBMITTAL TO TOWN PB	03/11/19	TJM

SCALE: 1"=50'

NOT FOR CONSTRUCTION

SHEET TITLE: EROSION & SEDIMENT CONTROL PLAN ACCESS ROAD

SHEET: 8 of 10

G:\SCHENECTADY\Duanesburg\Duanesburg Road (Route 7)\13590 Duanesburg Road\05-dwg\Detailed Plans\06_GPLN_OAK HILL.dwg Jul 03, 2019 08:19:19AM,

GENERAL NOTES:

THE ENVIRONMENTAL DESIGN PARTNERSHIP IS NOT RESPONSIBLE FOR ANY CONSTRUCTION WORK PERFORMED PRIOR TO FINAL APPROVAL OF ALL PLANS AND SECURING OF ALL PERMITS AND FILING OF ALL MAPS.

CONTRACTOR TO ARRANGE A PRECONSTRUCTION CONFERENCE WITH THE ENVIRONMENTAL DESIGN PARTNERSHIP AND MUNICIPALITY PRIOR TO CONSTRUCTION.

FIELD ADJUSTMENTS MUST BE APPROVED BY THE ENVIRONMENTAL DESIGN PARTNERSHIP AND THE MUNICIPALITY'S ENGINEER PRIOR TO CONSTRUCTION.

CONTRACTOR IS TO VERIFY THAT ALL NECESSARY WORK PERMITS AND EASEMENTS ARE IN PLACE PRIOR TO COMMENCEMENT OF WORK.

THE CONTRACTOR SHALL CONDUCT HIS OPERATIONS AND TAKE ALL SPECIAL TEMPORARY AND PERMANENT PRECAUTIONS NECESSARY TO ENSURE A STABLE AND SECURE JOB.

THE CONTRACTOR IS RESPONSIBLE FOR OBTAINING ANY TOWN, COUNTY OR STATE HIGHWAY CUT PERMITS.

THE CONTRACTOR SHALL SECURE ALL NECESSARY PERMITS AND EASEMENTS PRIOR TO CONSTRUCTION AND BECOME FAMILIAR WITH THE CONDITIONS OF EACH PERMIT.

THE CONTRACTOR SHALL PROTECT AND SUSTAIN IN NORMAL SERVICE ALL EXISTING UTILITIES, STRUCTURES, EQUIPMENT, ROADWAYS, AND DRIVEWAYS.

THE CONTRACTOR SHALL VERIFY THE LOCATION OF ALL EXISTING UTILITIES AND RIGHT-OF-WAY PROPERTY LINES PRIOR TO CONSTRUCTION.

THE CONTRACTOR IS RESPONSIBLE FOR LOCATING ALL UNDERGROUND UTILITIES SUCH AS GAS, POWER, TELEPHONE, CABLE TV, WATER, SEWER, ETC. PRIOR TO COMMENCEMENT OF CONSTRUCTION.

AS PER NYS INDUCTRIAL CODE 53: CONTRACTOR TO CALL DIG SAFELY NEW YORK, INC. AT 1-800-962-7962 TO LOCATE BURIED CABLES OR OTHER UNDERGROUND UTILITIES NO LESS THAN TWO OR MORE THAN TEN WORKING DAYS PRIOR TO DIGGING, DRILLING, EXCAVATING, DRIVING POSTS, ETC.

CONTRACTOR MUST VERIFY THE ACCEPTABILITY OF ALL CONSTRUCTION MATERIALS WITH MUNICIPALITY'S ENGINEER PRIOR TO ORDERING.

ANY EXISTING STORM SEWERS AND UNDERGROUND UTILITIES ARE SHOWN IN THEIR RELATIVE POSITION AND FOR INFORMATION ONLY. THE CONTRACTOR SHALL HAVE THEIR EXACT LOCATION CHECKED AT THE SITE BEFORE CONSTRUCTION BEGINS.

CONTRACTOR IS RESPONSIBLE FOR VERIFYING ALL EXISTING PIPE INVERT ELEVATIONS PRIOR TO COMMENCEMENT OF CONSTRUCTION. ANY DISCREPANCIES WHICH RESULT MUST BE BROUGHT TO THE ATTENTION OF THE ENGINEER IMMEDIATELY.

CONTRACTOR SHALL FIELD VERIFY ALL DIMENSIONS, GRADES, PIPE INVERTS AND ELEVATIONS AND REVIEW WITH CONSULTANT BEFORE CONSTRUCTION.

ALL EXCAVATION TO MEET OSHA AND NYS DOT SAFETY REGULATIONS AND STANDARDS.

THE CONTRACTOR SHALL FILL IN, AND RE-EXCAVATE, AS NECESSARY TO RESUME WORK, ANY EXCAVATIONS OR TRENCHES AT LOCATIONS AND AS OFTEN AS MAY BE REQUIRED TO ENSURE PROTECTION OF THE WORK, ANY ADJACENT EXISTING FACILITIES, OR THE PUBLIC.

THE CONTRACTOR SHALL CLEAN UP THE JOB SITE DAILY BEFORE LEAVING THE JOBSITE. ALL RUBBISH MUST BE CLEANED UP AND CONSTRUCTION EQUIPMENT MUST BE PROPERLY TAKEN CARE OF AND STORED AT THE END OF THE DAY.

CONTRACTOR IS RESPONSIBLE FOR TRAFFIC CONTROL AND SAFETY DURING CONSTRUCTION.

THE CONTRACTOR SHALL FURNISH ALL FLAGMEN AND SIGNS, DELINEATORS, BARRIERS, AND DEVICES NECESSARY FOR TRAFFIC CONTROL DURING ANY EARTH-MOVING OPERATION OR OTHER CONSTRUCTION ACTIVITY WHICH INVOLVES PUBLIC HIGHWAYS.

ALL TRAFFIC SIGNS, CONTROL DEVICES AND INFORMATIONAL ITEMS, IF DISTURBED DURING CONSTRUCTION WITHIN CONTRACT LIMIT LINES, SHALL BE RELOCATED AS PER APPROVAL OF MUNICIPALITY.

RESTORATION OF PAVEMENT IS THE RESPONSIBILITY OF THE CONTRACTOR. CONTRACTOR SHALL REPLACE AND RESTORE PAVEMENT WITH MATERIAL TO A CONDITION EQUAL TO OR BETTER THAN PRECONSTRUCTION CONDITIONS. ALL PAVEMENT AND RIGHT-OF-WAY RESTORATION WORK TO BE DONE TO THE SATISFACTION OF THE STATE, COUNTY OR LOCAL MUNICIPAL HIGHWAY DEPARTMENT.

CONTRACTOR SHALL RESTORE ALL LAWNS, DRIVEWAYS, WALKS, WALLS, CURBS, FENCES, ETC. TO A CONDITIONS AT LEAST AS GOOD AS THEY WERE BEFORE BEING DISTURBED.

BOX ALL TREES AND HOUSE ALL SHRUBS AND HEDGES BEFORE PLACING EARTH AGAINST OR NEAR THEM. SHRUBS AND HEDGES THAT MUST BE REMOVED DURING CONSTRUCTION SHALL BE HEALED OR REPLANTED IN AS GOOD A CONDITION AS THEY WERE BEFORE THEIR REMOVAL. ANY DAMAGED ITEMS SHALL BE REPLACED AT THE CONTRACTOR'S EXPENSE.

POSTS, MAILBOXES, ETC. SHALL BE PROTECTED, OR REMOVED AND REPLACED EXACTLY AS THEY WERE BEFORE BEING DISTURBED. DAMAGED ITEMS SHALL BE REPLACED AT THE CONTRACTOR'S EXPENSE.

IT MAY BE NECESSARY TO TIE OR HOLD BACK UTILITY POLES DURING CONSTRUCTION. THIS SHOULD BE ACCOMPLISHED IN COOPERATION WITH UTILITY COMPANIES.

NO WORK, STORAGE OR TRESPASS SHALL BE PERMITTED BEYOND THE BOUNDARIES OF ANY EASEMENTS OR R.O.W. AS SHOWN.

CONTRACTOR TO COMPLY WITH ALL OSHA AND OTHER STATE AND LOCAL SAFETY REQUIREMENTS DURING CONSTRUCTION (PROPER SHORING, ETC.).

SIDE SLOPES GRATER THAN 1:3 WILL REQUIRE GUIDE RAILS (1-FOOT VERTICAL, 3-FOOT HORIZONTAL).

ALL SITE WORK SHALL BE SMOOTHLY AND EVENLY BLENDED INTO EXISTING CONDITIONS. WHERE ACCESS OR WORK OUTSIDE OF PROPERTY BOUNDARY IS NECESSARY, THE PERMISSION OF ADJOINING PROPERTY OWNER MUST FIRST BE OBTAINED.

SITE SURVEYOR TO VERIFY ELEVATIONS OF EXISTING ROAD CENTERLINE AND SHOULDER PRIOR TO COMMENCING WORK. CONTRACTOR IS TO CONFIRM THIS WITH SITE SURVEYOR.

WHERE APPROPRIATE, SITE LAYOUT AND GRADING WORK SHALL BE COMPLETED BY A LICENSED PROFESSIONAL ENGINEER OR LAND SURVEYOR. LANDSCAPE ARCHITECT SHALL APPROVE ALL LAYOUT WORK PRIOR TO CONSTRUCTION.

CONTRACTOR TO NOTIFY ENGINEER AFTER ROUGH GRADING IS COMPLETED. FINISH GRADES TO BE ADJUSTED IN THE FIELD AFTER INITIAL GRADING IS COMPLETED. ALL CHANGES IN PROPOSED GRADES TO BE APPROVED BY OWNER AND ENGINEER.

ALL AREAS OF THE SITE WHICH ARE DISTURBED AND NOT PAVED SHALL BE TOPSOILED AND SEEDED.

ALL VERTICAL GRADE CHANGES GREATER THAN 30 INCHES SHALL BE PROVIDED WITH SAFETY BARRIERS AS PER NYS BUILDING CODE (FENCES, RAILINGS, ETC. PER OWNER).

SPECIFICATIONS FOR STREET/SITE LIGHTING ARE PER TOWN REQUIREMENTS/QUALIFIED PHOTOMETRIC ENGINEER RETAINED BY OWNER.

PRELIMINARY PAVEMENT AND SIDEWALK DESIGN SPECIFICATIONS ASSUME EXISTING SUBGRADE CONSISTS OF CLEAN, GRANULAR MATERIAL (SAND & GRAVEL) AND THAT THERE IS NO WATER TABLE INTERFERENCE. PRIOR TO CONSTRUCTION, THE PROJECT OWNER SHALL HAVE THE EXISTING SUBGRADE CONDITIONS EVALUATED BY A GEOTECHNICAL ENGINEER, WHO SHALL DETERMINE FINAL PAVEMENT AND SIDEWALK DESIGN SPECIFICATIONS. THE OWNER ASSUMES ALL RESPONSIBILITY FOR PAVEMENTS AND SIDEWALKS CONSTRUCTED WITHOUT A FINAL DESIGN, SHOULD HE CHOOSE NOT TO HIRE A GEOTECHNICAL ENGINEER.

FILL AREAS SHALL BE STRIPPED OF SOD, TOPSOIL AND UNSUITABLE MATERIAL AND BE MECHANICALLY COMPACTED TO THE SATISFACTION OF THE ENGINEER IN ACCORDANCE WITH NYSDOT 203-3.09

FILLS SHALL BE CONSTRUCTED WIN ACCORDANCE WITH NYSDOT 230-3.10, EMBANKMENTS. COMPACTION AND LIFT THICKNESS SHALL BE IN ACCORDANCE WITH NYSDOT 230-3.12.

EMBANKMENT SUBGRADE AREA (TWO FEET BELOW SUBGRADE ELEVATION) SHALL BE CONSTRUCTED IN ACCORDANCE WITH NYSDOT 230-2.02B., SELECT BARROW AND SELECT FILL, COMPACTED PER 203-3.12.

ALL AREAS OF THE SUBGRADE SURFACE WITHIN THE ROADWAY OR OTHER PAVEMENT AREA LIMITS SHALL BE PROOF-ROLLED, WITH UNSTABLE AREAS CORRECTED TO THE SATISFACTION OF THE ENGINEER, PRIOR TO PLACEMENT OF SUBBASE MATERIALS, BOTH EMBANKMENT AND CUT AREAS, IN ACCORDANCE WITH NYSDOT 203-3.13& 203-3.14.

THE INFORMATION REPRESENTED WITHIN THESE DOCUMENTS DOES NOT IMPLY ANY CONTRACT WITH, OR OBLIGATION FOR, PERFORMING ANY OR ALL TOWN, COUNTY, OR STATE REQUIRED INSPECTIONS DURING THE COURSE OF CONSTRUCTION OR PURSUANT TO OBTAINING CERTIFICATE OF OCCUPANCY. SUCH INSPECTION SERVICES, IF PERFORMED BY THIS OFFICE, SHALL BE ESTABLISHED BY SEPARATE CONTRACT.

IN THE EVENT THAT THE CONSTRUCTION STAKEOUT AND INSPECTION OF THE WORK IS NOT PERFORMED BY THE ENVIRONMENTAL DESIGN PARTNERSHIP (EDP), EDP WILL NOT BE HELD RESPONSIBLE FOR ANY ERRORS, OMISSIONS, COSTS, EXPENSES OR LIABILITY OF WHATEVER KIND AND NATURE RESULTING FROM FIELD CHANGES AND/OR ERRORS WHICH EDP WOULD OTHERWISE HAVE HAD AN OPPORTUNITY TO CHECK AND CORRECT WERE THEY IN A POSITION TO CONTROL THE PROJECT THROUGH STAKEOUT AND INSPECTION.

CLAIMS MADE AGAINST CONSULTANT FOR SURVEY STAKEOUT ERRORS WILL BE HONORED ONLY IF CONSULTANT IS NOTIFIED FOR VERIFICATION OF THE ERROR IMMEDIATELY UPON DISCOVERY AND BEFORE ANY CONTROL STAKES ARE DISTURBED. IF, AFTER VERIFICATION, IT IS DETERMINED THAT NO STAKEOUT ERROR OCCURRED, THE CLIENT SHALL REIMBURSE THE CONSULTANT FOR ADDITIONAL EXPENSES INCURRED FOR SUCH VERIFICATION.

ALL ERRORS, OMISSIONS AND DISCREPANCIES MUST BE BROUGHT TO THE ATTENTION OF THE ENVIRONMENTAL DESIGN PARTNERSHIP IMMEDIATELY UPON DISCOVERY, OTHERWISE, THE ENVIRONMENTAL DESIGN PARTNERSHIP WILL ACCEPT NO RESPONSIBILITY.

INSPECTION SERVICES BY THE ENVIRONMENTAL DESIGN PARTNERSHIP ARE NOT SUPERVISORY. ACCORDINGLY, THE ENVIRONMENTAL DESIGN PARTNERSHIP CAN NEITHER GUARANTEE THE PERFORMANCE OF THE CONSTRUCTION CONTRACTS BY CONTRACTORS NOR ASSUME RESPONSIBILITY FOR THE CONTRACTOR'S FAILURE TO FURNISH AND PERFORM WORK IN ACCORDANCE WITH THE CONTRACT DOCUMENTS.

CONTROLLED FILL AREAS: CONTROLLED, RELATIVELY CLEAN (12% MAX PASSING #200 SIEVE), GRANULAR FILL SHALL BE SPREAD IN LIFTS NOT EXCEEDING 12" IN LOOSE THICKNESS. THESE MATERIALS SHALL BE COMPACTED TO A MINIMUM 95% OF THE MAXIMUM ASTM SPECIFICATION D 1557-91 DENSITY, MODIFIED PROCTOR. ALL CONTROLLED FILL SHALL BE FREE OF ORGANIC AND/OR FROZEN MATERIALS.

NOTE:

FOR ADDITIONAL SITE DETAILS AND PLANS PERTAINING TO THE SOLAR PANEL SYSTEM SUCH AS CONDUIT BORE, EQUIPMENT PAD/ UTILITY DETAILS REFER TO PLANS BY BY OTHERS

GENERAL NOTES:

1. LIMITED USE PERVIOUS ACCESS ROAD IS LIMITED TO LOW IMPACT IRREGULAR MAINTENANCE ACCESS ASSOCIATED WITH RENEWABLE ENERGY PROJECTS IN NEW YORK STATE
2. REMOVE STUMPS, ROCKS AND DEBRIS AS NECESSARY. FILL VOIDS TO MATCH EXISTING NATIVE SOILS AND COMPACTION LEVEL.
3. THE LIMITED USE PERVIOUS ACCESS ROAD CROSS SLOPE SHALL BE 2% IN MOST CASES AND SHOULD NOT EXCEED 6%. THE LONGITUDINAL SLOPE OF THE ACCESS DRIVE SHOULD NOT EXCEED 15%
4. TO ENSURE THAT SOIL IS NOT TRACKED ONTO THE LIMITED USE PERVIOUS ACCESS ROAD, IT SHALL NOT BE USED BY CONSTRUCTION VEHICLES TRANSPORTING SOIL, FILL MATERIAL, ETC. IF THE LIMITED USE PERVIOUS ACCESS IS COMPLETED DURING THE INITIAL PHASES OF CONSTRUCTION, A STANDARD NEW YORK STATE STABILIZED CONSTRUCTION ACCESS SHALL BE CONSTRUCTED AND UTILIZED TO REMOVE SEDIMENT FROM CONSTRUCTION VEHICLES AND EQUIPMENT PRIOR TO ENTERING THE LIMITED USE PERVIOUS ACCESS ROAD FROM ANY LOCATION ON, OR OFF SITE. MAINTENANCE OF THE PERVIOUS ACCESS ROAD WILL BE REQUIRED IF SEDIMENT IS OBSERVED WITHIN THE CLEAN STONE.
5. THE LIMITED USE PERVIOUS ACCESS ROAD SHALL NOT BE CONSTRUCTED OR USED UNTIL ALL AREAS SUBJECT TO RUNOFF ONTO THE PERVIOUS ACCESS HAVE ACHIEVED FINAL STABILIZATION.

GEOGRID MATERIAL NOTES:

1. GRAVEL FILL MATERIAL SHALL CONSIST OF 1-4" CLEAN, DURABLE, SHARP-ANGLED CRUSHED STONE OF UNIFORM QUALITY, MEETING THE SPECIFICATIONS OF NYSDOT ITEM 703-02, SIZE DESIGNATION 3-5 OF TABLE 703-4. STONE MAY BE PLACED IN FRONT OF, AND SPREAD WITH, A TRACKED VEHICLE. GRAVEL SHALL NOT BE COMPACTED.
2. GEOGRID SHALL BE MIRAFI BXG110 OR APPROVED EQUAL. GEOGRID SHALL BE DESIGNED BASED ON EXISTING SOIL CONDITIONS AND PROPOSED HAUL ROAD SLOPES.
3. IF MORE THAN ONE ROLL WIDTH IS REQUIRED, ROLLS SHOULD OVERLAP A MINIMUM OF SIX INCHES.
4. REFER TO MANUFACTURER'S SPECIFICATION FOR PROPER TYING AND CONNECTIONS
5. LIMITED USE PERVIOUS ACCESS ROAD SHALL BE TOP DRESSED AS REQUIRED WITH ONLY 1-4" CRUSHED STONE MEETING NYSDOT ITEM 703-02 SPECIFICATIONS.

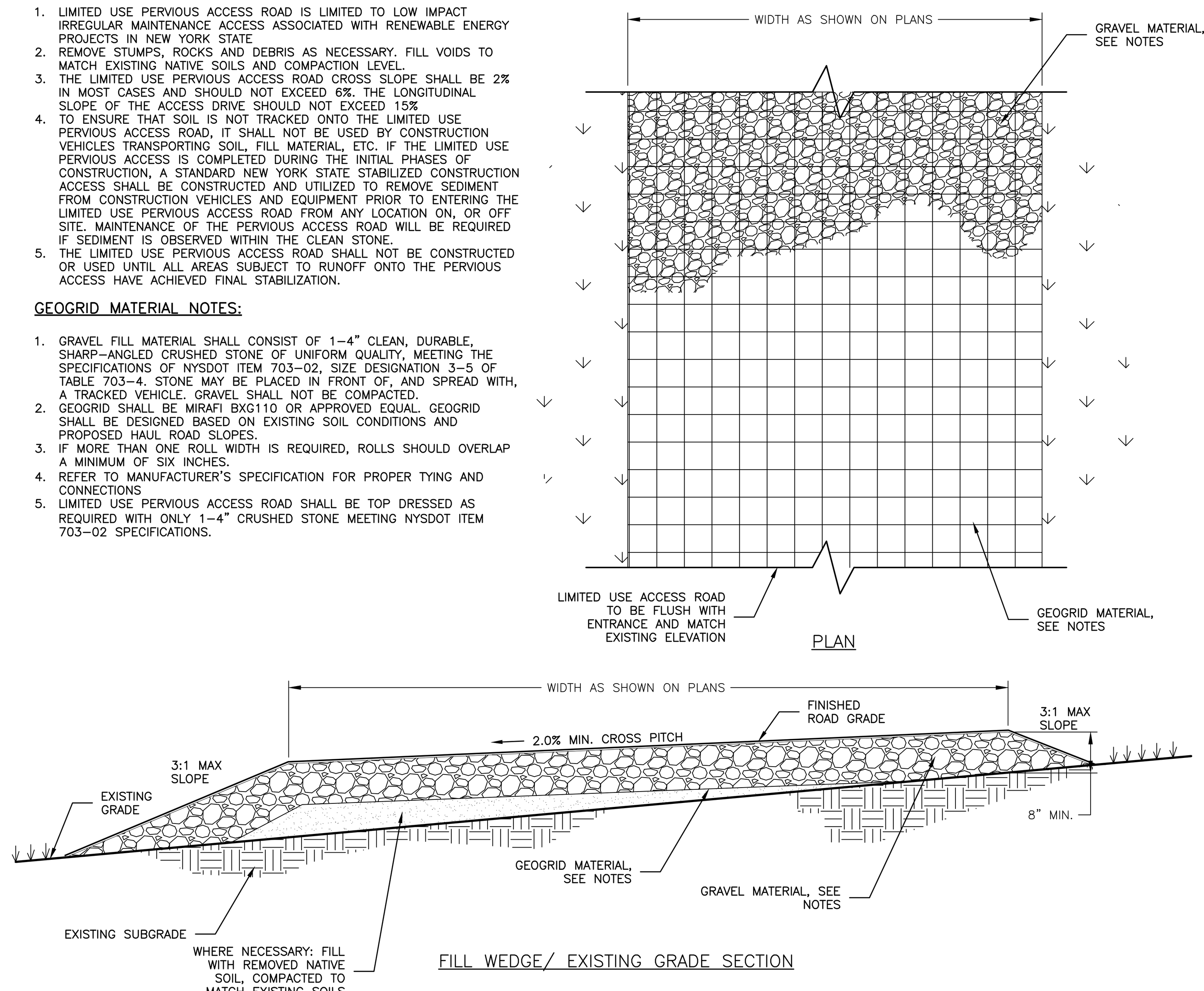

1/9 LIMITED USE PERVIOUS SOLAR ACCESS ROAD

NOT TO SCALE

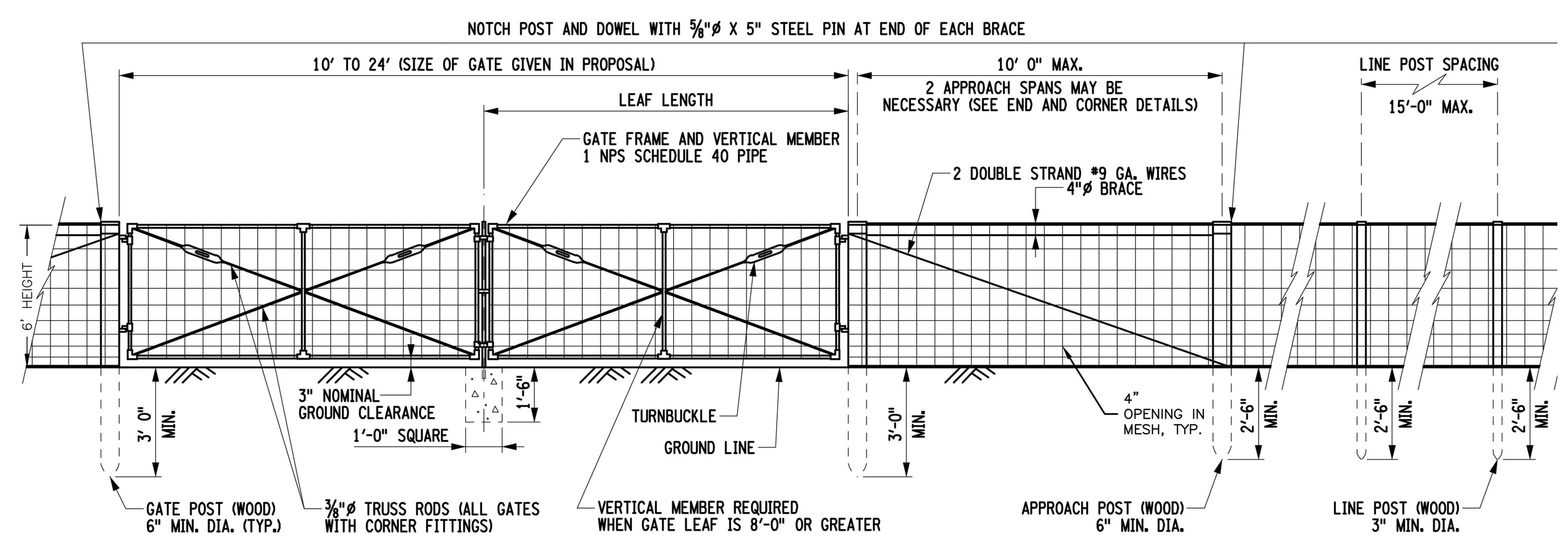

NOTE:

POSTS TO BE MECHANICALLY DRIVEN IN WETLAND AREAS

2/9 SOLAR FIELD FENCE

NOT TO SCALE

EROSION AND SEDIMENT CONTROL AND STABILIZATION MEASURES, MAINTENANCE AND INSPECTION PRACTICES:

1. THE FOLLOWING IS A LIST OF EROSION AND SEDIMENT CONTROLS TO BE USED ON THIS SITE DURING CONSTRUCTION:

   A) STABILIZATION PRACTICES FOR THIS SITE INCLUDE:
   - LAND CLEARING ACTIVITIES SHALL BE DONE ONLY IN AREAS WHERE EARTHWORK WILL BE PERFORMED AND SHALL PROGRESS AS EARTHWORK IS NEEDED
   - FREQUENT WATERING OF EXCAVATION AND FILL AREAS TO MINIMIZE WIND EROSION DURING CONSTRUCTION.
   - USE OF STABILIZATION FABRIC FOR ALL SLOPES HAVING A SLOPE OF 1V:2H OR GREATER AND FILL SLOPES 1V:3H OR GREATER.
   - PERMANENT SEEDING AND PLANTING OF ALL UNPAVED AREAS USING THE HYDROMULCHING GRASS SEEDING TECHNIQUE.

   B) STRUCTURAL PRACTICES FOR THIS SITE INCLUDE:
   - PERIMETER PROTECTION USING SILT FENCES
   - INLET PROTECTION AND OUTLET PROTECTION USING SILT FENCES
   - STORM SEWER, CURBS AND GUTTERS
   - STABILIZED CONSTRUCTION EXIT POINTS
   - STORMWATER DETENTION PONDS (WHICH MAY ALSO SERVE AS A TEMPORARY SEDIMENT BASIN)

2. THE FOLLOWING INSPECTION AND MAINTENANCE PRACTICES WILL BE USED TO MAINTAIN EROSION AND SEDIMENT CONTROLS AND STABILIZATION MEASURES:
   A) ALL CONTROL MEASURES WILL BE INSPECTED AT LEAST WEEKLY.
   B) ALL MEASURES WILL BE MAINTAINED IN GOOD WORKING ORDER; IF REPAIRS ARE FOUND TO BE NECESSARY, THEY WILL BE INITIATED WITHIN 24 HOURS OF REPORT.
   C) BUILT UP SEDIMENT WILL BE REMOVED FROM SILT FENCES / STRAW BARRIERS WHEN IT HAS REACHED ONE-THIRD THE HEIGHT OF THE FENCE.
   D) SILT FENCES / STRAW BARRIERS WILL BE INSPECTED FOR DEPTH OF SEDIMENT, TEARS, ETC., TO SEE IF THE FABRIC IS SECURELY ATTACHED TO THE FENCE POSTS, AND TO SEE THAT THE FENCE POSTS ARE SECURELY IN THE GROUND.
   E) THE SEDIMENT BASIN, IF PRESENT, WILL BE INSPECTED FOR DEPTH OF SEDIMENT, AND BUILT UP SEDIMENT WILL BE REMOVED WHEN IT REACHES 50 PERCENT OF THE DESIGN CAPACITY.
   F) TEMPORARY AND PERMANENT SEEDING AND ALL OTHER STABILIZATION MEASURES WILL BE INSPECTED FOR BARE SPOTS, WASHOUTS, AND HEALTHY GROWTH.
   G) A MAINTENANCE INSPECTION REPORT WILL BE MADE AFTER EACH INSPECTION. COPIES OF THE REPORT FORMS TO BE COMPLETED BY THE INSPECTOR ARE INCLUDED IN THIS SWPPP.
   H) THE JOB SITE SUPERINTENDENT WILL BE RESPONSIBLE FOR SELECTING AND TRAINING THE INDIVIDUALS WHO WILL BE RESPONSIBLE FOR THESE INSPECTIONS, MAINTENANCE AND REPAIR ACTIVITIES, AND FILLING OUT INSPECTION AND MAINTENANCE REPORTS.
   I) PERSONNEL SELECTED FOR THE INSPECTION AND MAINTENANCE RESPONSIBILITIES WILL RECEIVE APPROPRIATE INSTRUCTION FROM THE JOB SITE SUPERINTENDENT. THEY WILL BE TRAINED IN ALL THE INSPECTION AND MAINTENANCE PRACTICES NECESSARY FOR KEEPING THE EROSION AND SEDIMENT CONTROLS THAT ARE USED ONSITE IN GOOD WORKING ORDER. THEY WILL ALSO BE TRAINED IN THE COMPLETION OF, INITIATION OF ACTIONS REQUIRED BY, AND THE FILING OF THE INSPECTION FORMS. DOCUMENTATION OF THIS PERSONNEL TRAINING WILL BE KEPT ON SITE WITH THE SWPPP.
   J) DISTURBED AREAS AND MATERIALS STORAGE AREAS WILL BE INSPECTED FOR EVIDENCE OF OR POTENTIAL FOR POLLUTANTS ENTERING STORMWATER SYSTEMS.
   K) REPORT TO THE NYS DEPARTMENT OF ENVIRONMENTAL CONSERVATION WITHIN 24 HOURS ANY NONCOMPLIANCE WITH THE SWPPP THAT WILL ENDANGER PUBLIC HEALTH OR THE ENVIRONMENT. FOLLOW UP WITH A WRITTEN REPORT WITHIN 5 DAYS OF THE NONCOMPLIANCE EVENT.

ADDITIONAL EROSION CONTROL AND GRADING NOTES:

1. **MINIMAL EROSION CONTROL DEVICES ARE ILLUSTRATED ON SITE PLAN IN A SCHEMATIC MANNER BASED ON NY STATE GUIDELINES FOR EROSION AND SEDIMENT CONTROL. IT WILL BE NECESSARY TO ADJUST THE ACTUAL LOCATION AND QUANTITY OF EROSION CONTROL DEVICES DEPENDING UPON FIELD CONDITIONS. THE CONTRACTOR SHALL BE RESPONSIBLE FOR IMPLEMENTING THESE MEASURES AS REQUIRED TO PROTECT THE SITE.**
2. SLOPES SHALL TYPICALLY BE GRADED AT A MAXIMUM OF 3:1 (3 HORIZ. 1 VERT.) WITHIN ALL CUT OR FILL AREAS, UNLESS OTHERWISE DESIGNATED ON PLANS.
3. SEED SHALL BE A COMMERCIALLY AVAILABLE MIXTURE OF PERENNIAL RYE AND UTILITY GRADE FESCUE. PERCENTAGE OF PERENNIAL RYE SHALL NOT EXCEED 50%.
4. SEEDED AREAS SHALL BE FULLY COVERED WITH A LEAN STRAW OR MULCH MATERIAL. IF ORDERED BY THE ENGINEER OR MUNICIPALITY, A BIODEGRADABLE NETTING (E.G., EXCELSIOR BLANKET, COIR GEOTEXTILE) SHALL BE ANCHORED OVER SEEDED AREAS WHICH DEMONSTRATE "RILLING" OR OTHER EROSION PROCESSES.
5. TOPSOIL AND SEED SHALL BE REAPPLIED TO ANY AREAS WHICH FAIL TO ESTABLISH AS A RESULT OF INITIAL APPLICATION.
6. SILT FENCE BARRIERS SHALL BE PLACED WITHIN ALL AREAS OF EXPOSED SLOPES TO CONTROL SOIL EROSION DURING AND AFTER CONSTRUCTION.
7. ALL STORM OUTFALLS SHALL RECEIVE RIP RAP IMMEDIATELY UPON INSTALLATION (AS PER PLAN).
8. EROSION CONTROL (ERO-MAT) OR APPROVED EQUAL, SHALL BE INSTALLED ON ALL 2:1 SLOPES: AN ORGANIC FIBER PROTECTIVE MAT, HALF INCH LAYER OF CHOPPED STRAW, KNITTED INTO A RUGGED MAT WITH A THIN NETTING OF PHOTODEGRADABLE POLYPROPYLENE. SECURE MAT TO SLOPE WITH 6" STEEL U-SHAPED STABLES, 2 STAPLES PER SQUARE YARD, OR AS PER MANUFACTERER'S INSTRUCTIONS.
9. STREAM REACHES ON-SITE AND DOWNSTREAM OF CONSTRUCTION SHALL NOT HAVE SUBSTANTIAL VISIBLE CONTRAST RELATIVE TO COLOR, TASTE, ODOR, TURBIDITY AND SEDIMENT DEPOSITION FROM THE REACHES UPSTREAM OF THE CONSTRUCTION ACTIVITY.
10. VEHICULAR ACCESS POINTS SHALL BE MONITORED AND INSPECTED AT THE SAME FREQUENCY AS EROSION CONTROL FEATURES TO INSURE THAT DEPOSITS OF SAND, SILT OR OTHER MATERIAL IS NOT BEING DEPOSITED ON PUBLIC ROADWAYS. IN THE EVENT ANY SIGNIFICANT DEPOSITS OCCUR THEY SHALL BE CLEANED UP IMMEDIATELY.
11. KEEP ALL CONSTRUCTION EQUIPMENT, TOPSOIL STOCKPILES AND ANY TEMPORARY/PERMANENT GRAVEL AREAS OFF FUTURE SEPTIC AREAS.

DISTURBANCE NOTE:
CONTRACTOR TO USE NECESSARY CONSTRUCTION METHODS AND SCHEDULING TO ENSURE THAT THE TOTAL DISTURBANCE ON THE SITE IS LIMITED TO LESS THAN 5 ACRES AT ANY ONE TIME.

SEQUENCE OF CONSTRUCTION ACTIVITIES:

1. CONSTRUCT TEMPORARY CONSTRUCTION EXITS AT LOCATIONS SHOWN.
2. NSTALL PERIMETER SILT FENCES AND TEMPORARY SEDIMENT BASIN IN THE LOCATIONS SHOWN AND OTHER LOCATIONS AS NECESSARY TO STABILIZE THE SITE.
3. BEGIN CLEARING AND GRUBBING OPERATIONS. CLEARING AND GRUBBING SHALL BE DONE ONLY IN AREAS WHERE EARTHWORK WILL BE PERFORMED AND ONLY IN AREAS WHERE BUILDING IS PLANNED TO COMMENCE WITHIN 14 DAYS AFTER CLEARING AND GRUBBING.
4. FREQUENT WATERING OF THE EXCAVATION AND FILL AREAS SHALL BE DONE TO MINIMIZE WIND EROSION.
5. COMMENCE SITE GRADING AND CONSTRUCTION.
6. DISTURBED AREAS OF THE SITE WHERE CONSTRUCTION ACTIVITY HAS CEASED FOR MORE THAN 14 DAYS SHALL BE TEMPORARILY SEEDED AND WATERED.
7. INSTALL PROTECTIVE SILT FENCES / BARRIERS AT THE LOCATIONS OF ALL GRATE INLETS, CURB INLETS, AND AT THE ENDS OF ALL EXPOSED STORM SEWER PIPES.
8. FINALIZE PAVEMENT SUBGRADE PREPARATION.
9. CONSTRUCT ALL CURB AND GUTTER, GUTTER INLETS, AREA INLETS, AND STORM SEWER MANHOLES, AS SHOWN ON THE PLANS. INLET PROTECTION HAY BALES MAY BE REMOVED TEMPORARILY FOR THIS CONSTRUCTION. PLACE REQUIRED RIPRAP AT LOCATIONS SHOWN ON THE PLANS.
10. REMOVE SILT FENCES / STRAW BARRIERS AROUND INLETS AND MANHOLES NO MORE THAN 48 HOURS PRIOR TO PLACING STABILIZED BASE COURSE.
11. INSTALL BASE MATERIAL AS REQUIRED FOR PAVEMENT.
12. CARRY OUT FINAL GRADING AND SEEDING AND PLANTING
13. REMOVE SILT FENCING / STRAW BARRIERS ONLY AFTER ALL PAVING IS COMPLETE AND EXPOSED SURFACES ARE STABILIZED.
14. REMOVE TEMPORARY CONSTRUCTION EXITS ONLY PRIOR TO PAVEMENT CONSTRUCTION IN THESE AREAS (THESE AREAS ARE TO BE PAVED LAST).

SOIL RESTORATION:

AS PER CHAPTER 5 OF THE NEW YORK STATE STORMWATER MANAGEMENT DESIGN MANUAL, SOIL RESTORATION IS REQUIRED ON THIS SITE IN ALL NON-IMPERVIOUS AREAS ONCE FINAL SUBGRADE ELEVATION IS ACHIEVED. IN AREAS OF CUT OR FILL THE SOILS SHALL BE AERATED AND 6 INCHES OF TOPSOIL SHALL BE APPLIED. IN AREAS OF HEAVY CONSTRUCTION TRAFFIC (ESPECIALLY IN AREAS 5 TO 25 FEET FROM BUILDING, BUT NOT WITHIN 5 FEET OF FOUNDATION WALLS) THE FOLLOWING RESTORATION MUST BE APPLIED:

1. APPLY 3 INCHES OF COMPOST OVER SUBSOIL.
2. TILL COMPOST INTO SUBSOIL TO A DEPTH OF AT LEAST 12 INCHES USING A CAT-MOUNTED RIPPER, TRACTOR-MOUNTED DISC, OR TILLER, MIXING, AND CIRCULATING AIR AND COMPOST INTO SOIL.
3. ROCK-PICK UNTIL UPLIFTED STONE/ROCK MATERIALS OF 4 INCHES AND LARGER SIZE ARE CLEANED OFF THE SITE.
4. APPLY TOPSOIL TO A DEPTH OF 6 INCHES
5. VEGETATE AS REQUIRED BY APPROVED PLAN.

SILT FENCE GENERAL NOTES:

1. SILT FENCE SHALL BE PLACED A MINIMUM OF 5 FT. FROM TOE OF SLOPE, 10 FT. PREFERRED, TO PROVIDE ADEQUATE AREA FOR SEDIMENT STORAGE AND FACILITATE MAINTENANCE OF SEDIMENT CONTAINMENT AREA.
2. POSTS MAY BE 1.25"x1.25" (MINIMUM) HARDWOOD, TYPICALLY. FOR WIRE MESH BACK USE 2"x2" NOM. HARDWOOD, OR STEEL "T" OR "U" POSTS (1lb per lf). SILT FENCE SHALL BE WOVEN GEOTEXTILE FABRIC(GEOTEX 2130 OR EQUAL).
3. SILT FENCE ASSEMBLIES MAY HAVE 4 FT. OR 6 FT. POST SPACING, AND MAY OR MAY NOT HAVE MESH REINFORCEMENT. SENSITIVE AREAS TO BE PROTECTED MAY NEED TO BE REINFORCED BY USING HEAVY WIRE FENCING FOR ADDED SUPPORT TO PREVENT COLLAPSE.
4. THE BOTTOM EDGE OF SILT FENCE SHALL BE BURIED A MINIMUM OF 6" BELOW GROUND. THE FENCE SHALL BE INSTALLED WITH THE POSTS ON THE DOWNSTREAM SIDE OF THE FABRIC.
5. MAXIMUM ALLOWABLE SLOPE LENGTHS CONTRIBUTING RUNOFF TO A SILT FENCE PLACED ON A SLOPE ARE:

SLOPE STEEPNESS	MAXIMUM LENGTH (ft.)
2:1	25
3:1	50
4:1	75
5:1 OR FLATTER	100

6. MAXIMUM DRAINAGE AREA FOR OVERLAND FLOW TO A SILT FENCE SHALL NOT EXCEED ¼ ACRE PER 100 FEET OF FENCE, WITH MAXIMUM PONDING DEPTH OF 1.5 FEET BEHIND THE FENCE; AND EROSION WOULD OCCUR IN THE FORM OF SHEET EROSION; AND THERE IS NO CONCENTRATION OF WATER FLOWING TO THE BARRIER.
7. MEASURES SHALL BE INSPECTED EVERY SEVEN (7) CALENDAR DAYS, AFTER EACH RAINFALL OF .5" OR MORE WITHIN A 12 HOUR PERIOD, OR DAILY DURING PROLONGED RAINFALL. MEASURES SHALL BE CLEANED AND REPAIRED AS REQUIRED.
8. SEDIMENT SHALL BE REMOVED WHEN ACCUMULATION REACHES ONE-THIRD OF THE MEASURE HEIGHT. SEDIMENT SHALL BE DISPOSED OF AS UNSUITABLE MATERIAL.

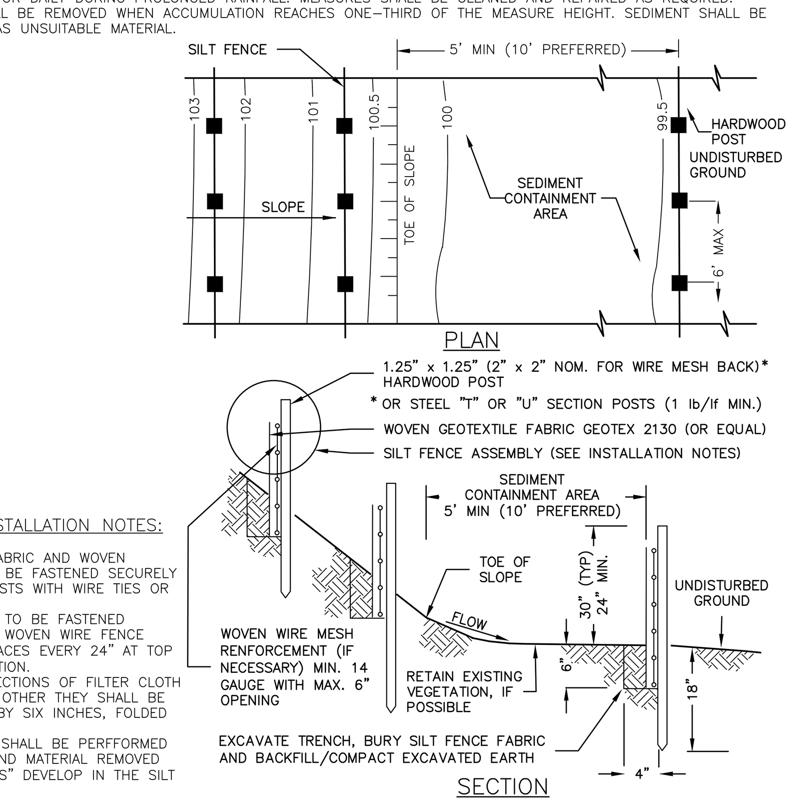

SILT FENCE INSTALLATION NOTES:

1. GEOTEXTILE FABRIC AND WOVEN WIREMESH TO BE FASTENED SECURELY TO FENCE POSTS WITH WIRE TIES OR STAPLES.
2. FILTER CLOTH TO BE FASTENED SECURELY TO WOVEN WIRE FENCE WITH TIES SPACES EVERY 24" AT TOP AND MID SECTION.
3. WHEN TWO SECTIONS OF FILTER CLOTH ADJOIN EACH OTHER THEY SHALL BE OVERLAPPED BY SIX INCHES, FOLDED AND STAPLED.
4. MAINTENANCE SHALL BE PERFFORMED AS NEEDED AND MATERIAL REMOVED WHEN "BULGES" DEVELOP IN THE SILT FENCE.

3/9 SILT FENCE

NOT TO SCALE

NOTE:

1. WHEN UTILIZING PERVIOUS ACCESS ROAD, IT SHALL NOT BE USED BY CONSTRUCTION VEHICLES TRANSPORTING SOIL, FILL MATERIAL, ETC. IF THE LIMITED USE PERVIOUS ACCESS IS COMPLETED DURING THE INITIAL PHASES OF CONSTRUCTION, A STANDARD NEW YORK STATE STABILIZED CONSTRUCTION ACCESS SHALL BE CONSTRUCTED AND UTILIZED TO REMOVE SEDIMENT FROM CONSTRUCTION VEHICLES AND EQUIPMENT PRIOR TO ENTERING THE LIMITED USE PERVIOUS ACCESS ROAD FROM ANY LOCATION ON, OR OFF SITE. MAINTENANCE OF THE PERVIOUS ACCESS ROAD WILL BE REQUIRED IF SEDIMENT IS OBSERVED WITHIN THE CLEAN STONE.

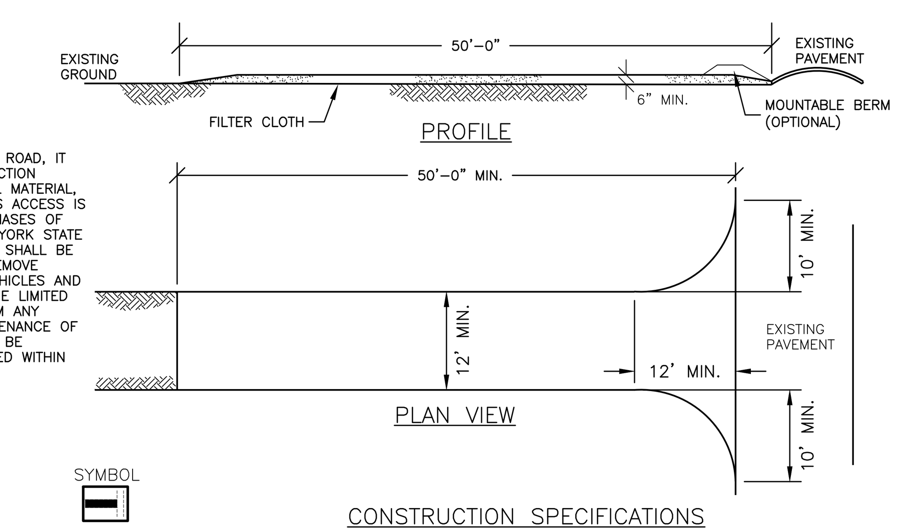

CONSTRUCTION SPECIFICATIONS

1. STONE SIZE - USE 2" CRUSHED STONE, OR RECLAIMED OR RECYCLED CONCRETE EQUIVALENT.
2. LENGTH - AS EFFECTIVE BUT NOT LESS THAN 50 FEET.
3. THICKNESS - NOT LESS THAN SIX(6) INCHES.
4. WIDTH - TWELVE (12) FOOT MINIMUM, BUT NOT LESS THAN THE FULL WIDTH AT POINTS WHERE INGRESS OR EGRESS OCCURS. TWENTY-FOUR (24) FOOT IF SINGLE ENTRANCE TO SITE.
5. FILTER CLOTH - WILL BE PLACED OVER ENTIRE AREA PRIOR TO PLACING OF STONE.
6. SURFACE WATER - ALL SURFACE WATER FLOWING OR DIVERTED TOWARD CONSTRUCTION ENTRANCES SHALL BE PIPED ACROSS THE ENTRANCE. IF PIPING IS IMPRACTICAL, A MOUNTABLE BERM WITH 5:1 SLOPES WILL BE PERMITTED.
5. WASHING - WHEN NECESSARY, WHEELS SHALL BE CLEANED TO REMOVE SEDIMENT PRIOR TO ENTRANCE ONTO PUBLIC RIGHT-OF-WAY. WHEN WASHING IS REQUIRED, IT SHALL BE DONE ON AN AREA STABILIZED WITH CRUSHED STONE WHICH DRAINS INTO AN APPROVED SEDIMENT TRAP OR SEDIMENT BASIN. ALL SEDIMENT SHALL BE PREVENTED FROM ENTERING ANY STORM DRAIN, DITCH OR WATERCOURSE THROUGH USE OF SAND BAGS, GRAVEL BOARDS OR OTHER APPROVED METHODS.
6. MAINTENANCE - THE ENTRANCE SHALL BE MAINTAINED IN A CONDITION WHICH WILL PREVENT TRACKING OR FLOWING OF SEDIMENT ONTO PUBLIC RIGHTS-OF-WAY. THIS MAY REQUIRE PERIODIC TOP DRESSING WITH ADDITIONAL STONE AS CONDITIONS DEMAND AND REPAIR AND/OR CLEANOUT OF ANY MEASURES USED TO TRAP SEDIMENT. ALL SEDIMENT SPILLED, DRIPPED, WASHED OR TRACKED ONTO PUBLIC RIGHTS-OF-WAY MUST BE REMOVED IMMEDIATELY.
7. PERIODIC INSPECTION AND NEEDED MAINTENANCE SHALL BE PROVIDED AFTER EACH RAIN.

4/9 STABILIZED CONSTRUCTION ENTRANCE

NOT TO SCALE

ENVIRONMENTAL DESIGN PARTNERSHIP, LLP.
900 Route 146 Clifton Park, New York 12065
(518) 371-7621
edpllp.com

PROPOSED SITE PLAN FOR
OAK HILL SOLAR 1&2
APPLICANT: OAK HILL SOLAR 1, LLC/ OAK HILL SOLAR 2, LLC

13590 DUANESBURG ROAD
TOWN OF DUANESBURG
SCHENECTADY COUNTY, NEW YORK

TAX MAP No. 74.00-2-5
FEBRUARY 8, 2019

DRAWN BY	
CHECKED BY	
EDP PROJECT NUMBER	11740

THE ALTERATION OF THESE DOCUMENTS IN ANY WAY, UNLESS DONE UNDER THE DIRECT SUPERVISION OF A COMPARABLE PROFESSIONAL, (I.E.) ENGINEER FOR AN ENGINEER, LANDSCAPE ARCHITECT FOR A LANDSCAPE ARCHITECT OR SURVEYOR FOR A SURVEYOR, IS A VIOLATION OF THE NEW YORK STATE EDUCATION LAW AND/OR REGULATIONS AND IS A CLASS "A" MISDEMEANOR.

REVISION	DATE	BY
SUBMITTAL TO TOWN PB	03/11/19	TJM
RESUBMITTAL TO TOWN PB	03/11/19	TJM

SCALE: N.T.S.

NOT FOR CONSTRUCTION

SHEET TITLE: SITE DETAILS

SHEET: 9 of 10

Q:\SCHENECTADY\Duanesburg\Duanesburg Road (Route 7)\13590 Duanesburg Road\05-dwg\Detailed Plans\11_DT_OAK HILL.dwg Jul 03, 2019 08:18:31AM,

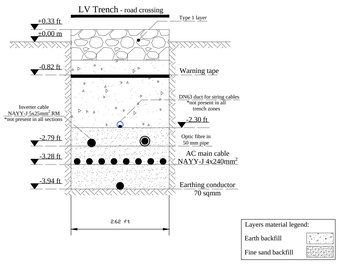

TRENCH CROSS SECTION (BY OTHERS)
NOT TO SCALE

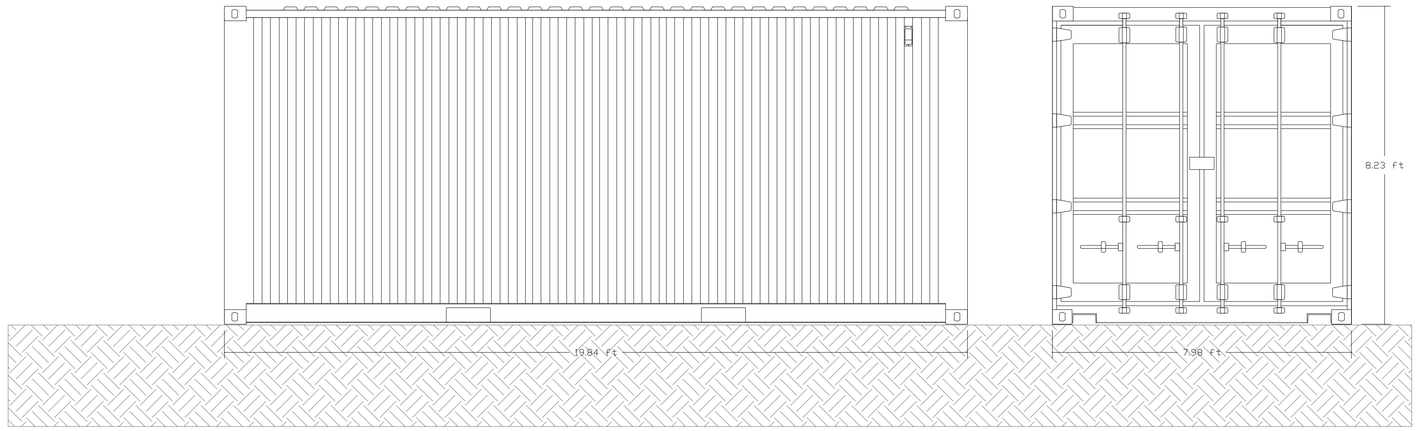

SPARE PART CONTAINER (BY OTHERS)
NOT TO SCALE

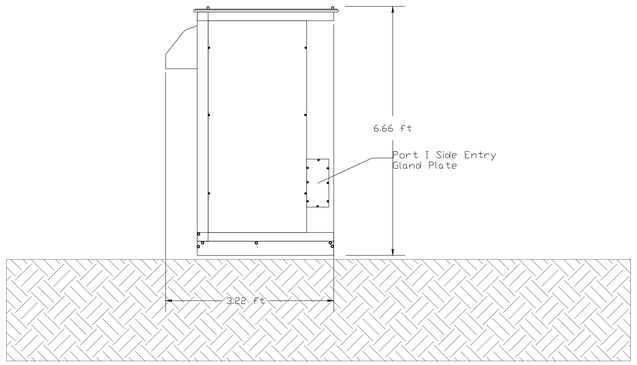

DC TO DC CONVERTER (BY OTHERS)
NOT TO SCALE

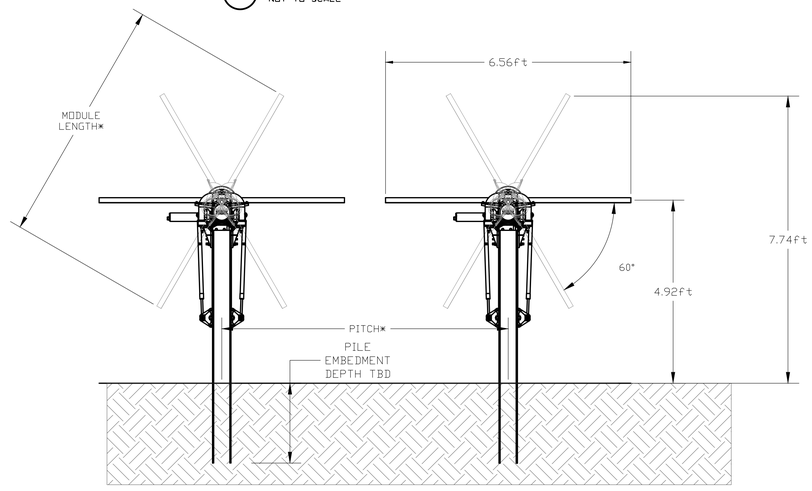

PV TRACKER SYSTEM (BY OTHERS)
NOT TO SCALE

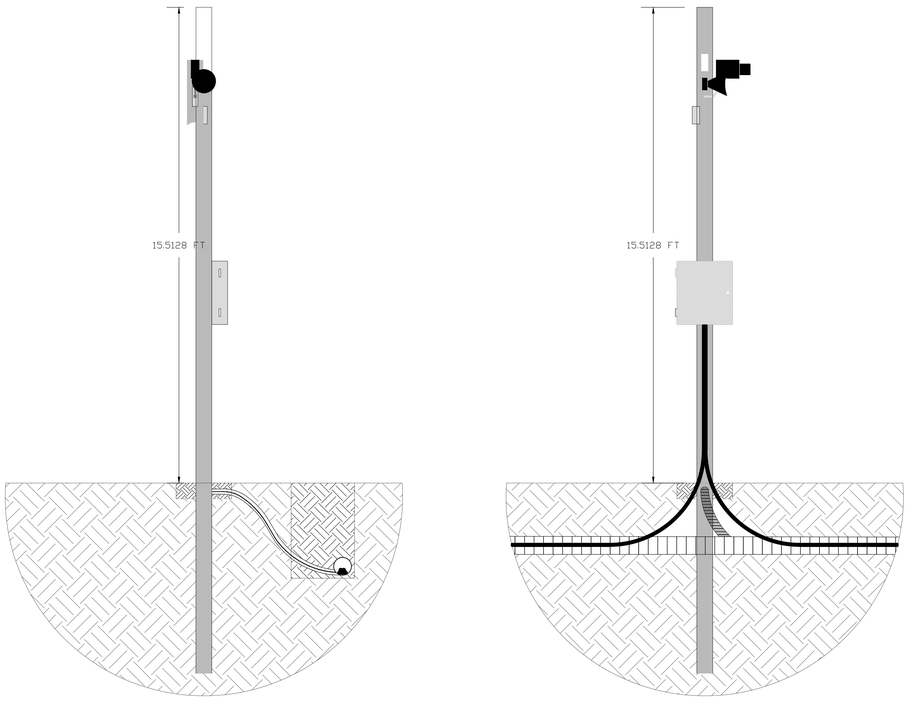

CCTV POLE DETAIL (BY OTHERS)
NOT TO SCALE

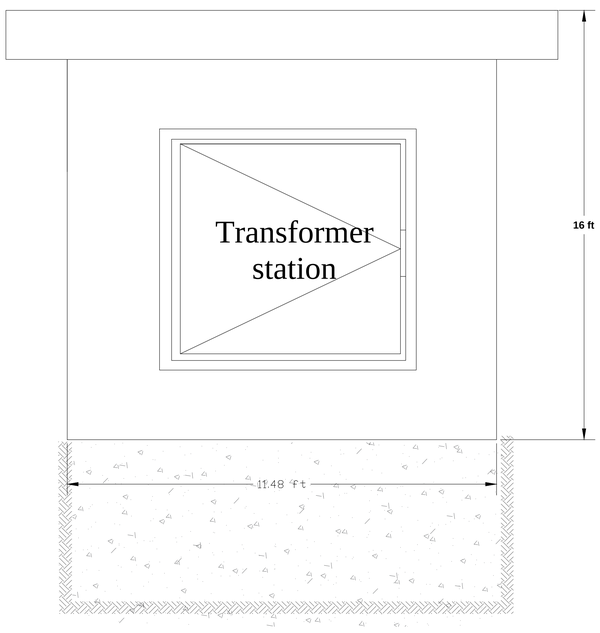

TRANSFORMER STATION (BY OTHERS)
NOT TO SCALE

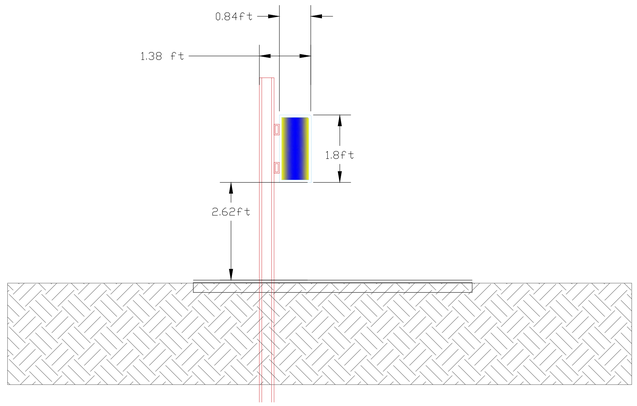

INVERTER ON POLES (BY OTHERS)
NOT TO SCALE

ENVIRONMENTAL DESIGN PARTNERSHIP, LLP.
900 Route 146 Clifton Park, New York, 12065
(518) 371-7621
edpllp.com

PROPOSED SITE PLAN FOR
OAK HILL SOLAR 1&2
APPLICANT: OAK HILL SOLAR 1, LLC/ OAK HILL SOLAR 2, LLC

13590 DUANESBURG ROAD
TOWN OF DUANESBURG
SCHENECTADY COUNTY, NEW YORK

TAX MAP No. 74.00-2-5
FEBRUARY 8, 2019

DRAWN BY	
CHECKED BY	
EDP PROJECT NUMBER	11740

THE ALTERATION OF THESE DOCUMENTS IN ANY WAY, UNLESS DONE UNDER THE DIRECT SUPERVISION OF A COMPARABLE PROFESSIONAL, (I.E.) ENGINEER FOR AN ENGINEER, LANDSCAPE ARCHITECT FOR A LANDSCAPE ARCHITECT, OR SURVEYOR FOR A SURVEYOR, OR THE DIRECTED OF SUPERVISION FOR A SURVEYOR, IS A VIOLATION OF THE NEW YORK STATE EDUCATION LAW AND/OR REGULATIONS AND IS A CLASS "A" MISDEMEANOR.

REVISION	DATE	BY
SUBMITTAL TO TOWN PB	03/11/19	TJM
RESUBMITTAL TO TOWN PB	05/11/19	TJM

SCALE: N.T.S.

NOT FOR CONSTRUCTION

SHEET TITLE: DETAILS BY OTHERS

SHEET: 10 of 10

G:\SCHENECTADY\Duanesburg\Duanesburg Road (Route 7)\13590 Duanesburg Road\05-dwg\Detailed Plans\11_01_OAK HILL.dwg Jul 03, 2019 09:09:25AM